BURR - BROWN®

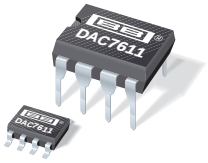

DAC7611

12-Bit Serial Input DIGITAL-TO-ANALOG CONVERTER

FEATURES

- LOW POWER: 2.5mW
- FAST SETTLING: 7µs to 1 LSB
- 1mV LSB WITH 4.095V FULL-SCALE RANGE
- COMPLETE WITH REFERENCE
- 12-BIT LINEARITY AND MONOTONICITY OVER INDUSTRIAL TEMP RANGE
- ASYNCHRONOUS RESET TO 0V
- 3-WIRE INTERFACE: Up to 20MHz Clock
- ALTERNATE SOURCE TO DAC8512

APPLICATIONS

- PROCESS CONTROL
- DATA ACQUISITION SYSTEMS
- CLOSED-LOOP SERVO-CONTROL
- PC PERIPHERALS
- PORTABLE INSTRUMENTATION

DESCRIPTION

The DAC7611 is a 12-bit digital-to-analog converter (DAC) with guaranteed 12-bit monotonicity performance over the industrial temperature range. It requires a single +5V supply and contains an input shift register, latch, 2.435V reference, DAC, and high speed rail-to-rail output amplifier. For a full-scale step, the output will settle to 1 LSB within 7µs. The device consumes 2.5mW (0.5mA at 5V).

The synchronous serial interface is compatible with a wide variety of DSPs and microcontrollers. Clock (CLK), serial data in (SDI), and load strobe ($\overline{LD}$) comprise the serial interface. In addition, two control pins provide a chip select ($\overline{CS}$) function and an asynchronous clear ($\overline{CLR}$) input. The $\overline{CLR}$ input can be used to ensure that the DAC7611 output is 0V on power-up or as required by the application.

The DAC7611 is available in an 8-lead SOIC or 8-pin plastic DIP package and is fully specified over the industrial temperature range of –40°C to +85°C.

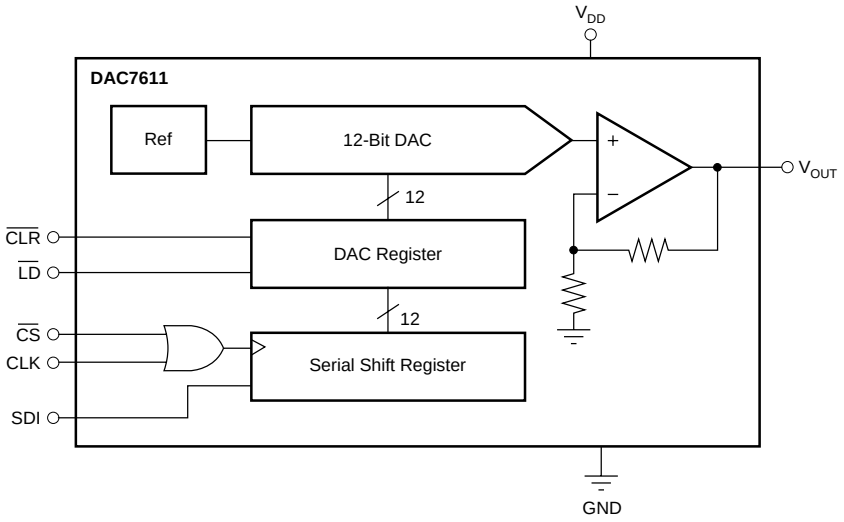

International Airport Industrial Park • Mailing Address: PO Box 11400, Tucson, AZ 85734 • Street Address: 6730 S. Tucson Blvd., Tucson, AZ 85706 • Tel: (520) 746-1111 • Twx: 910-952-1111
Internet: http://www.burr-brown.com/ • FAXLine: (800) 548-6133 (US/Canada Only) • Cable: BBRCORP • Telex: 066-6491 • FAX: (520) 889-1510 • Immediate Product Info: (800) 548-6132

© 1997 Burr-Brown Corporation
PDS-1402A
Printed in U.S.A. April, 1998

SPECIFICATIONS

ELECTRICAL

At T_A = –40°C to +85°C, and V_{DD} = +5V, unless otherwise noted.

PARAMETER	CONDITIONS	DAC7611P, U			DAC7611PB, UB			UNITS
		MIN	TYP	MAX	MIN	TYP	MAX	
ACCURACY								
Resolution		12			*			Bits
Relative Accuracy(1)		–2	±1/2	+2	–1	±1/4	+1	LSB
Differential Nonlinearity	Guaranteed Monotonic	–1	±1/2	+1	–1	±1/4	+1	LSB
Zero-Scale Error	Code 000_H	–1	+1	+3	*	*	*	LSB
Full Scale Voltage	Code FFF_H	4.079	4.095	4.111	4.087	4.095	4.103	V
ANALOG OUTPUT								
Output Current	Code 800_H	±5	±7		*	*		mA
Load Regulation	$R_{LOAD} \geq 402\Omega$, Code 800_H		1	3		*	*	LSB
Capacitive Load	No Oscillation		500			*		pF
Short Circuit Current			±70			*		mA
Short Circuit Duration	GND or V_{DD}		Indefinite			*		
DIGITAL INPUT								
Data Format			Serial			*		
Data Coding			Straight Binary			*		
Logic Family			TTL			*		
Logic Levels								
V_{IH}		2.4			*			V
V_{IL}				0.8			*	V
I_{IH}				±10			*	µA
I_{IL}				±10			*	µA
DYNAMIC PERFORMANCE								
Settling Time(2) (t_S)	To ±1 LSB of Final Value		7			*		µs
DAC Glitch			15			*		nV-s
Digital Feedthrough			2			*		nV-s
POWER SUPPLY								
V_{DD}		+4.75	+5.0	+5.25	*	*	*	V
I_{DD}	V_{IH} = 5V, V_{IL} = 0V, No Load, at Code 000_H		0.5	1		*	*	mA
Power Dissipation	V_{IH} = 5V, V_{IL} = 0V, No Load		2.5	5		*	*	mW
Power Supply Sensitivity	ΔV_{DD} = ±5%		0.001	0.004		*	*	%/%
TEMPERATURE RANGE								
Specified Performance		–40		+85	*		*	°C

* Same specification as for DAC7611P, U.

NOTES: (1) This term is sometimes referred to as Linearity Error or Integral Nonlinearity (INL). (2) Specification does not apply to negative-going transitions where the final output voltage will be within 3 LSBs of ground. In this region, settling time may be double the value indicated.

The information provided herein is believed to be reliable; however, BURR-BROWN assumes no responsibility for inaccuracies or omissions. BURR-BROWN assumes no responsibility for the use of this information, and all use of such information shall be entirely at the user's own risk. Prices and specifications are subject to change without notice. No patent rights or licenses to any of the circuits described herein are implied or granted to any third party. BURR-BROWN does not authorize or warrant any BURR-BROWN product for use in life support devices and/or systems.

PIN CONFIGURATION

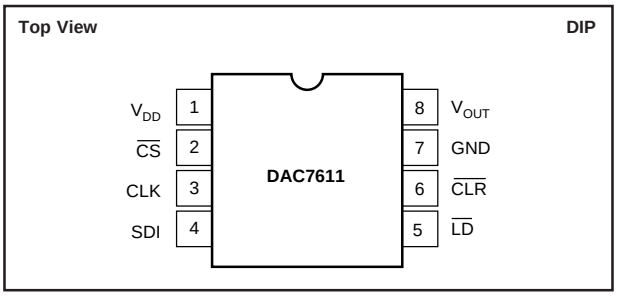

PIN CONFIGURATION

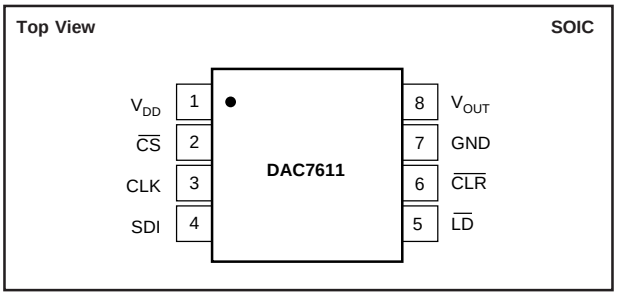

ABSOLUTE MAXIMUM RATINGS[1]

V_{DD} to GND	–0.3V to 6V
Digital Inputs to GND	–0.3V to V_{DD} + 0.3V
V_{OUT} to GND	–0.3V to V_{DD} + 0.3V
Power Dissipation	325mW
Thermal Resistance, θ_{JA}	150°C/W
Maximum Junction Temperature	+150°C
Operating Temperature Range	–40°C to +85°C
Storage Temperature Range	–65°C to +150°C
Lead Temperature (soldering, 10s)	+300°C

NOTE: (1) Stresses above those listed under "Absolute Maximum Ratings" may cause permanent damage to the device. Exposure to absolute maximum conditions for extended periods may affect device reliability.

PIN DESCRIPTION

PIN	LABEL	DESCRIPTION
1	V_{DD}	Power Supply
2	$\overline{CS}$	Chip Select (active LOW).
3	CLK	Synchronous Clock for the Serial Data Input.
4	SDI	Serial Data Input. Data is clocked into the internal serial register on the rising edge of CLK.
5	$\overline{LD}$	Loads the Internal DAC Register. NOTE: The DAC register is a transparent latch and is transparent when $\overline{LD}$ is LOW (regardless of the state of $\overline{CS}$ or CLK).
6	$\overline{CLR}$	Asynchronous Input to Clear the DAC Register. When $\overline{CLR}$ is strobbed LOW, the DAC register is set to 000_H and the output voltage to 0V.
7	GND	Ground
8	V_{OUT}	Voltage Output. Fixed output voltage range of approximately 0V to 4.095V (1mV/LSB). The internal reference maintains this output range over time, temperature, and power supply variations (within the values defined in the specifications section).

ELECTROSTATIC DISCHARGE SENSITIVITY

This integrated circuit can be damaged by ESD. Burr-Brown recommends that all integrated circuits be handled with appropriate precautions. Failure to observe proper handling and installation procedures can cause damage.

ESD damage can range from subtle performance degradation to complete device failure. Precision integrated circuits may be more susceptible to damage because very small parametric changes could cause the device not to meet its published specifications.

PACKAGE/ORDERING INFORMATION

PRODUCT	MINIMUM RELATIVE ACCURACY (LSB)	DIFFERENTIAL NONLINEARITY (LSB)	SPECIFICATION TEMPERATURE RANGE	PACKAGE	PACKAGE DRAWING NUMBER[1]	ORDERING NUMBER[2]	TRANSPORT MEDIA
DAC7611P	±2	±1	–40°C to +85°C	8-Pin DIP	006	DAC7611P	Rails
DAC7611U	±2	±1	–40°C to +85°C	8-Lead SOIC	182	DAC7611U	Rails
"	"	"	"	"	"	DAC7611U/2K5	Tape and Reel
DAC7611PB	±1	±1	–40°C to +85°C	8-Pin DIP	006	DAC7611PB	Rails
DAC7611UB	±1	±1	–40°C to +85°C	8-Lead SOIC	182	DAC7611UB	Rails
"	"	"	"	"	"	DAC7611UB/2K5	Tape and Reel

NOTES: (1) For detailed drawing and dimension table, please see end of data sheet, or Appendix C of Burr-Brown IC Data Book. (2) Models with a slash (/) are available only in Tape and Reel in the quantities indicated (e.g., /2K5 indicates 2500 devices per reel). Ordering 2500 pieces of "DAC7611/2K5" will get a single 2500-piece Tape and Reel. For detailed Tape and Reel mechanical information, refer to Appendix B of Burr-Brown IC Data Book.

EQUIVALENT INPUT LOGIC

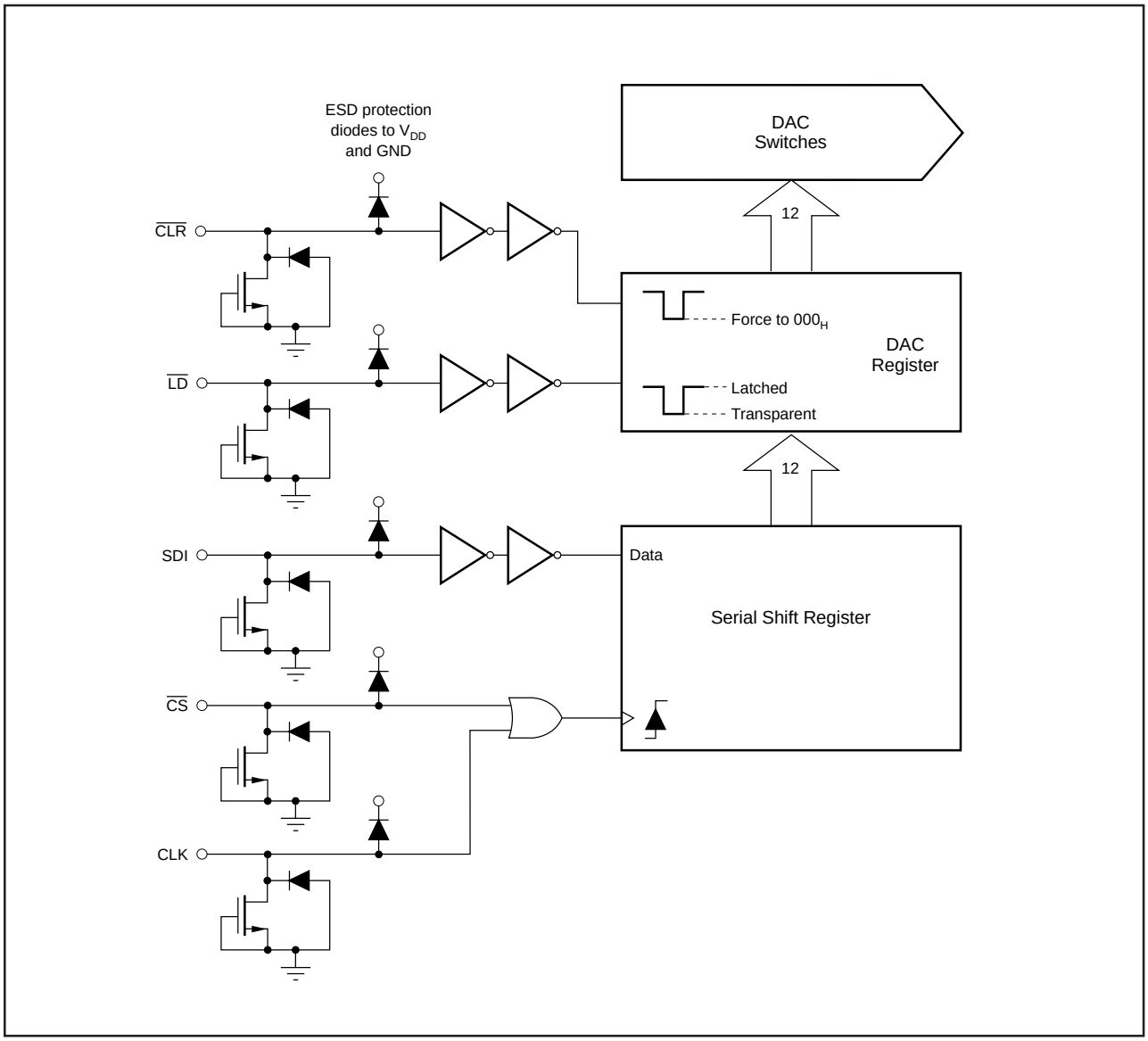

TIMING DIAGRAMS

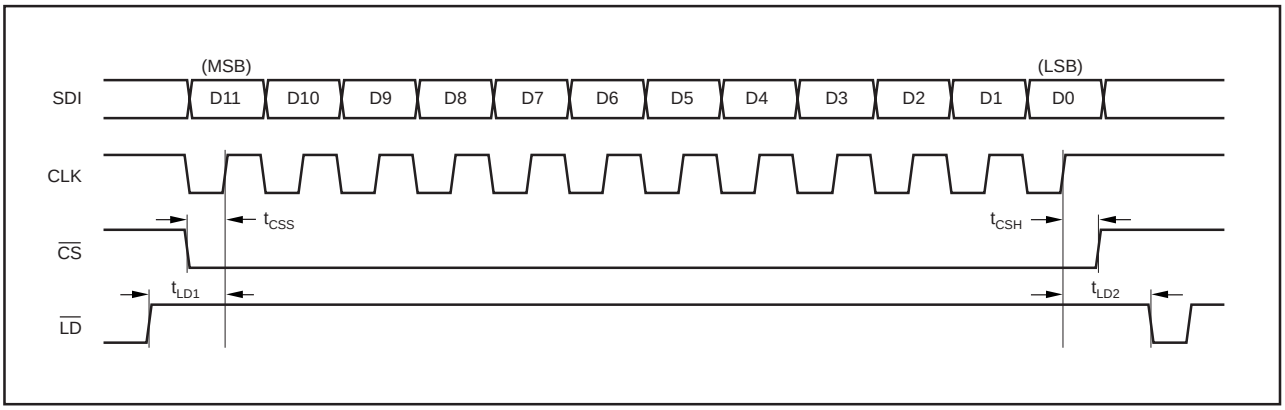

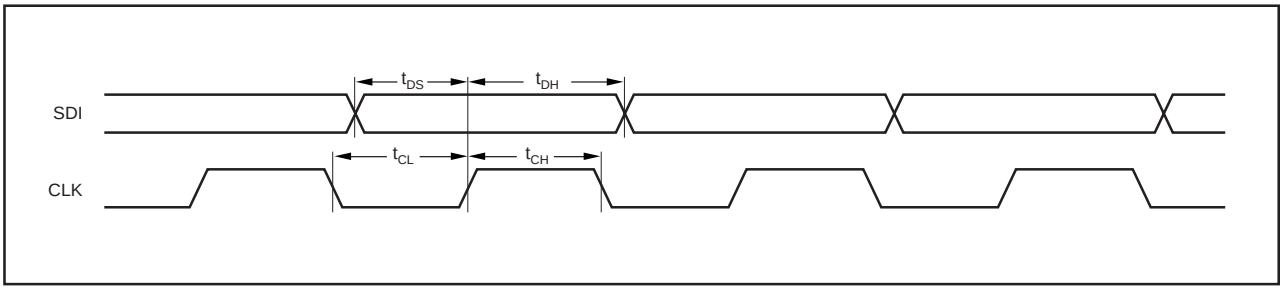

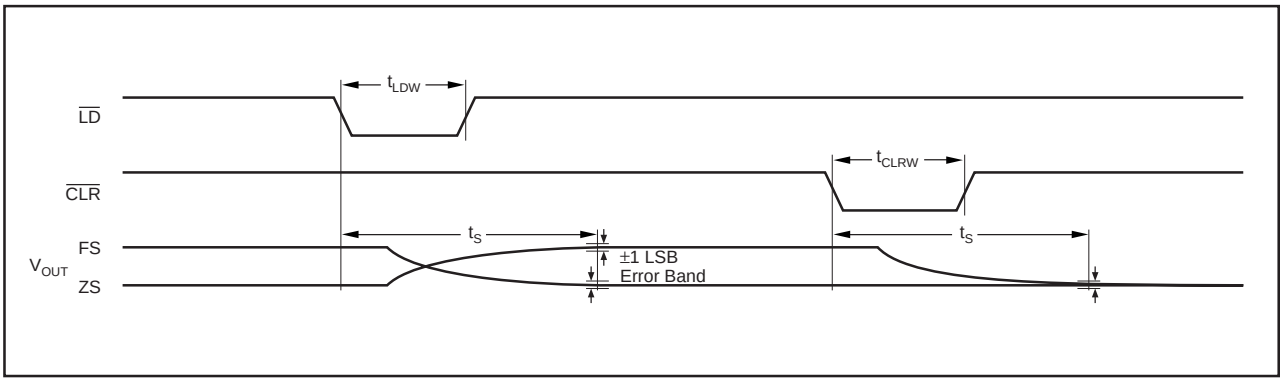

LOGIC TRUTH TABLE

$\overline{CS}$(1)	CLK(1)	$\overline{CLR}$	$\overline{LD}$	SERIAL SHIFT REGISTER	DAC REGISTER
H	X	H	H	No Change	No Change
L	L	H	H	No Change	No Change
L	H	H	H	No Change	No Change
L	↑	H	H	Advanced One Bit	No Change
↑	L	H	H	Advanced One Bit	No Change
H(2)	X	H	↓	No Change	Changes to Value of Serial Shift Register
H(2)	X	H	L(3)	No Change	Transparent
H	X	L	X	No Change	Loaded with 000_H
H	X	↑	H	No Change	Latched with 000_H

↑ Positive Logic Transition; ↓ Negative Logic Transition; X = Don't Care.

NOTES: (1) $\overline{CS}$ and CLK are interchangeable. (2) A HIGH value is suggested in order to avoid to "false clock" from advancing the shift register and changing the DAC voltage. (3) If data is clocked into the serial register while $\overline{LD}$ is LOW, the DAC output voltage will change, reflecting the current value of the serial shift register.

TIMING SPECIFICATIONS

T_A = –40°C to +85°C and V_{DD} = +5V.

SYMBOL	DESCRIPTION	MIN	TYP	MAX	UNITS
t_{CH}	Clock Width HIGH	30			ns
t_{CL}	Clock Width LOW	30			ns
t_{LDW}	Load Pulse Width	20			ns
t_{DS}	Data Setup	15			ns
t_{DH}	Data Hold	15			ns
t_{CLRW}	Clear Pulse Width	30			ns
t_{LD1}	Load Setup	15			ns
t_{LD2}	Load Hold	10			ns
t_{CSS}	Select	30			ns
t_{CSH}	Deselect	20			ns

NOTE: All input control signals are specified with $t_R = t_F$ = 5ns (10% to 90% of +5V) and timed from a voltage level of 1.6V. These parameters are guaranteed by design and are not subject to production testing.

TYPICAL PERFORMANCE CURVES

At T_A = +25°, and V_{DD} = 5V, unless otherwise specified.

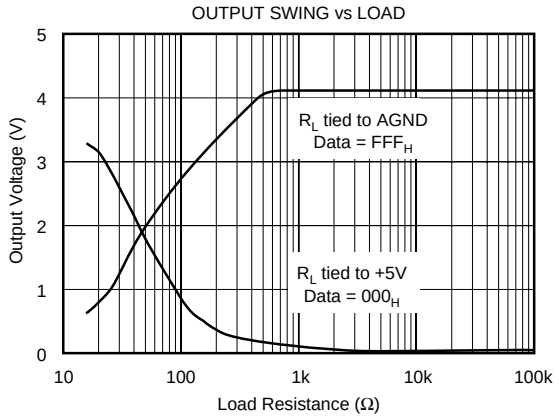

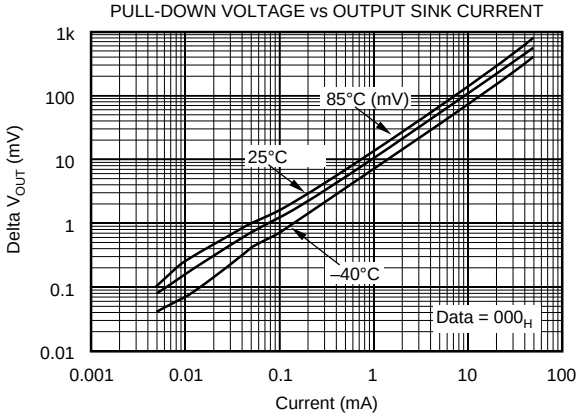

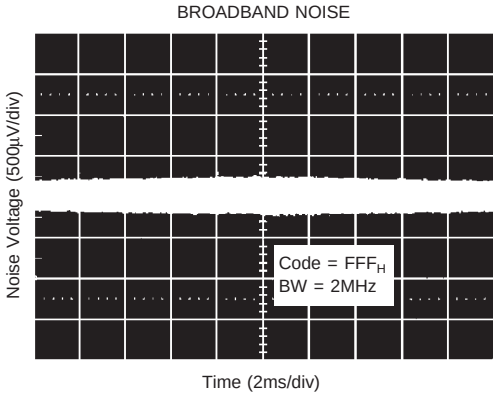

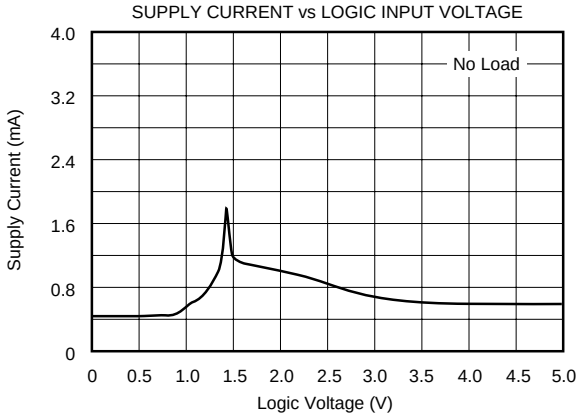

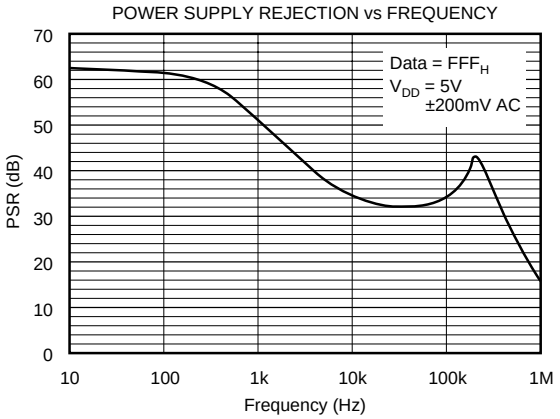

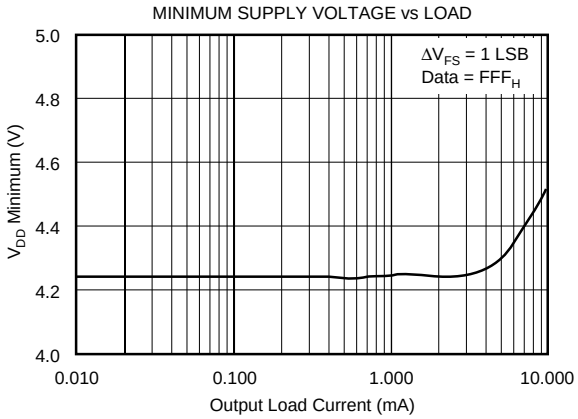

TYPICAL PERFORMANCE CURVES (CONT)

At T_A = +25°, and V_{DD} = 5V, unless otherwise specified.

SHORT-CIRCUIT CURRENT vs OUTPUT VOLTAGE

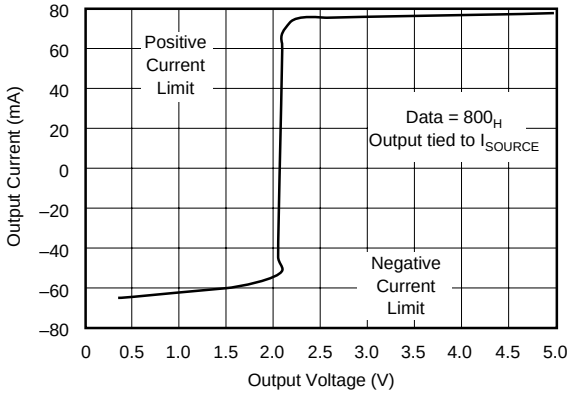

SUPPLY CURRENT vs TEMPERATURE

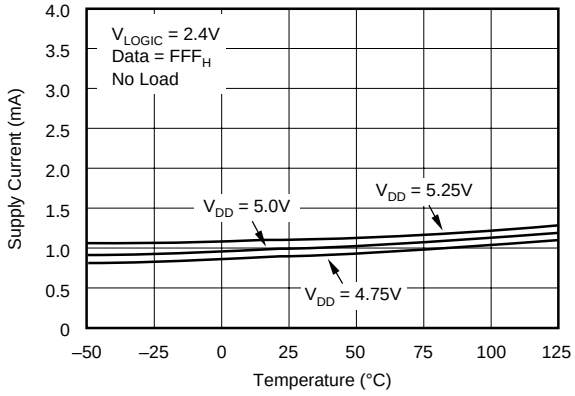

MIDSCALE GLITCH PERFORMANCE

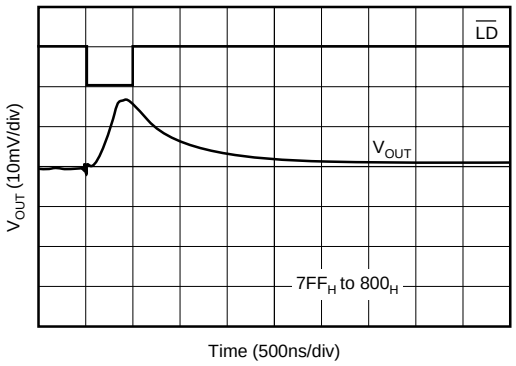

MIDSCALE GLITCH PERFORMANCE

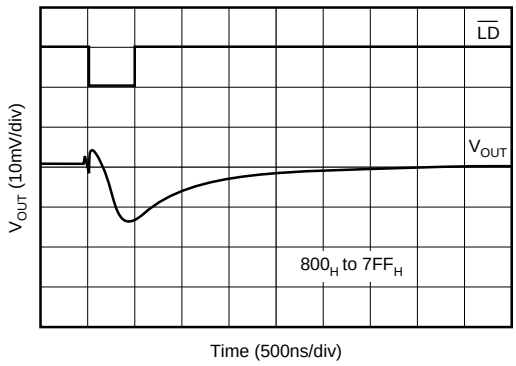

LARGE-SIGNAL SETTLING TIME

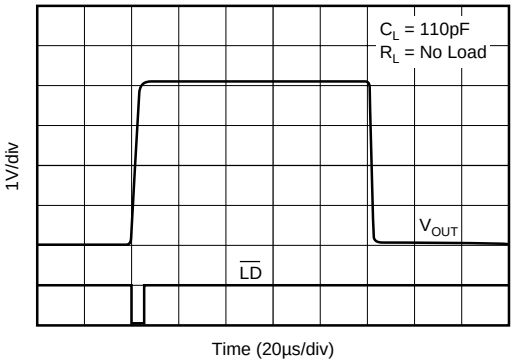

RISE TIME DETAIL

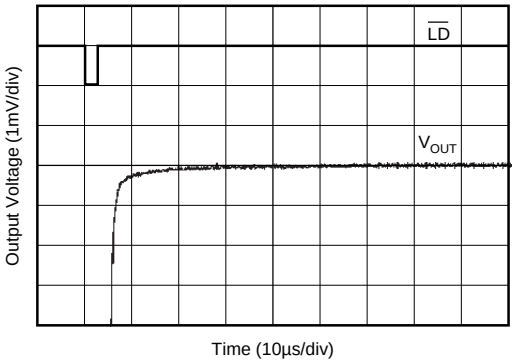

TYPICAL PERFORMANCE CURVES (CONT)

At T_A = +25°, and V_{DD} = 5V, unless otherwise specified.

FALL TIME DETAIL

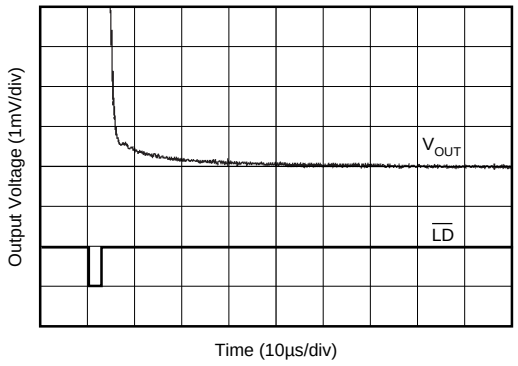

OUTPUT VOLTAGE NOISE vs FREQUENCY

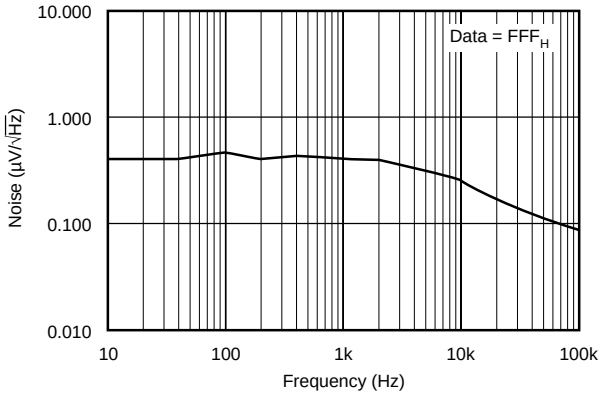

LONG-TERM DRIFT ACCELERATED BY BURN-IN

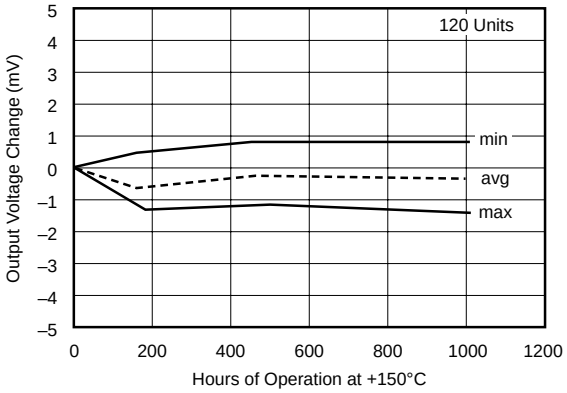

TOTAL UNADJUSTED ERROR HISTOGRAM

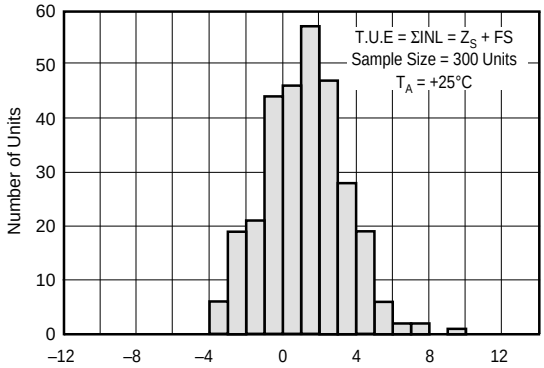

FULL-SCALE VOLTAGE vs TEMPERATURE

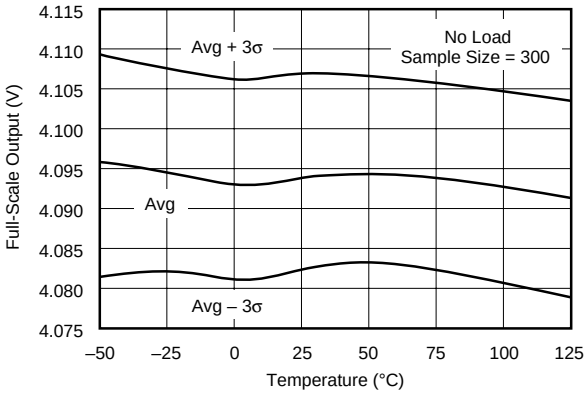

ZERO-SCALE VOLTAGE vs TEMPERATURE

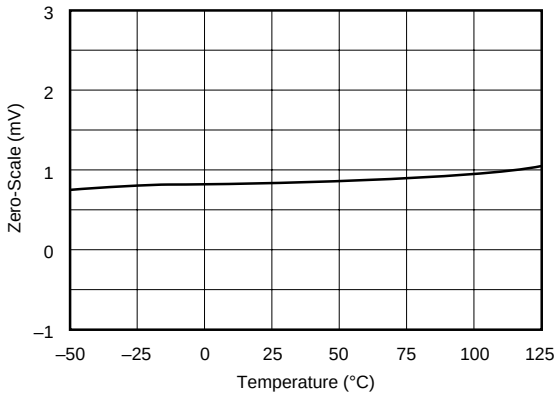

TYPICAL PERFORMANCE CURVES (CONT)

At T_A = +25°, and V_{DD} = 5V, unless otherwise specified.

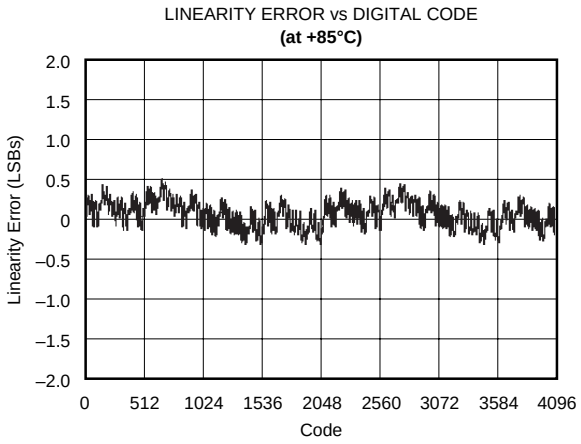

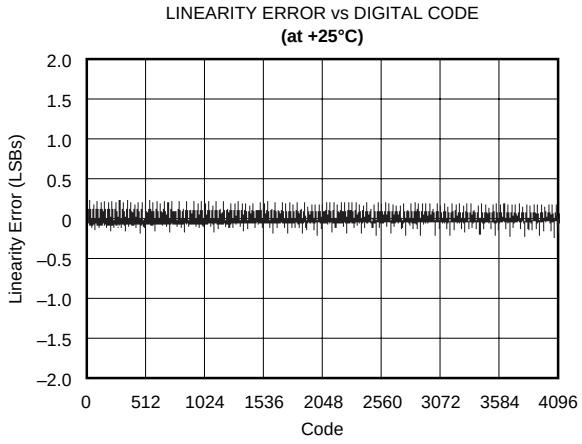

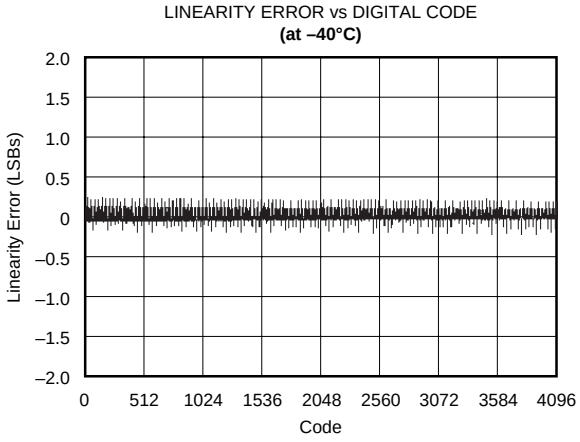

OPERATION

The DAC7611 is a 12-bit digital-to-analog converter (DAC) complete with a serial-to-parallel shift register, DAC register, laser-trimmed 12-bit DAC, on-board reference, and a rail-to-rail output amplifier. Figure 1 shows the basic operation of the DAC7611.

INTERFACE

Figure 1 shows the basic connection between a microcontroller and the DAC7611. The interface consists of a serial clock (CLK), serial data (SDI), and a load strobe signal ($\overline{LD}$). In addition, a chip select ($\overline{CS}$) input is available to enable serial communication when there are multiple serial devices. The data format is Straight Binary and is loaded MSB-first into the shift registers. An asynchronous clear input ($\overline{CLR}$) is provided to simplify start-up or periodic resets. Table I shows the relationship between input code and output voltage.

The digital data into the DAC7611 is double-buffered. This means that new data can be entered into the DAC without disturbing the old data and the analog output of the converter. At some point after the data has been entered into the serial shift register, this data can be transferred into the DAC register. This transfer is accomplished with a HIGH to LOW transition of the $\overline{LD}$ pin. However, the $\overline{LD}$ pin makes the DAC register transparent. If new data is shifted into the shift register while $\overline{LD}$ is LOW, the DAC output voltage will change as each new bit is entered. To prevent this, $\overline{LD}$ must be returned HIGH prior to shifting in new serial data.

At any time, the contents of the DAC register can be set to 000_H (analog output equals 0V) by taking the $\overline{CLR}$ input LOW. The DAC register will remain at this value until $\overline{CLR}$ is returned HIGH and $\overline{LD}$ is taken LOW to allow the contents of the shift register to be transferred to the DAC register. If $\overline{LD}$ is LOW when $\overline{CLR}$ is taken LOW, the DAC register will be set to 000_H and the analog output driven to 0V. When $\overline{CLR}$ is returned HIGH, the DAC register will be set to the current value in the serial shift register and the analog output will respond accordingly.

DAC7611 Full-Scale Range = 4.095V Least Significant Bit = 1mV		
DIGITAL INPUT CODE STRAIGHT BINARY	**ANALOG OUTPUT (V)**	**DESCRIPTION**
FFF_H	+4.095	Full Scale
801_H	+2.049	Midscale + 1 LSB
800_H	+2.048	Midscale
$7FF_H$	+2.047	Midscale – 1 LSB
000_H	0	Zero Scale

TABLE I. Digital Input Code and Corresponding Ideal Analog Output.

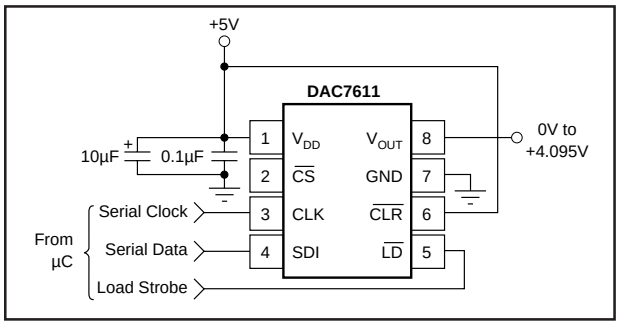

FIGURE 1. Basic Operation of the DAC7611.

DIGITAL-TO-ANALOG CONVERTER

The internal DAC section is a 12-bit voltage output device that swings between ground and the internal reference voltage. The DAC is realized by a laser-trimmed R-2R ladder network which is switched by N-channel MOSFETs. The DAC output is internally connected to the rail-to-rail output operational amplifier.

OUTPUT AMPLIFIER

A precision, low-power amplifier buffers the output of the DAC section and provides additional gain to achieve a 0 to 4.095V range. The amplifier has low offset voltage, low noise, and a set gain of 1.682V/V (4.095/2.435). See Figure 2 for an equivalent circuit schematic of the analog portion of the DAC7611.

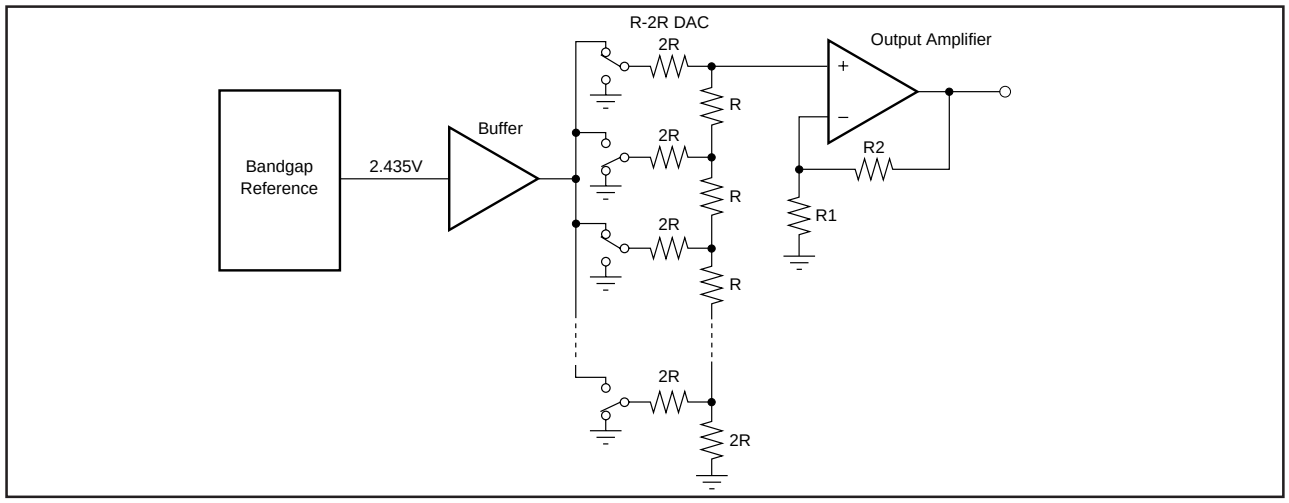

FIGURE 2. Simplified Schematic of Analog Portion.

The output amplifier has a 7µs typical settling time to ±1 LSB of the final value. Note that there are differences in the settling time for negative-going signals versus positive-going signals.

The rail-to-rail output stage of the amplifier provides the full-scale range of 0V to 4.095V while operating on a supply voltage as low as 4.75V. In addition to its ability to drive resistive loads, the amplifier will remain stable while driving capacitive loads of up to 500pF. See Figure 3 for an equivalent circuit schematic of the amplifier's output driver and the Typical Performance Curves section for more information regarding settling time, load driving capability, and output noise.

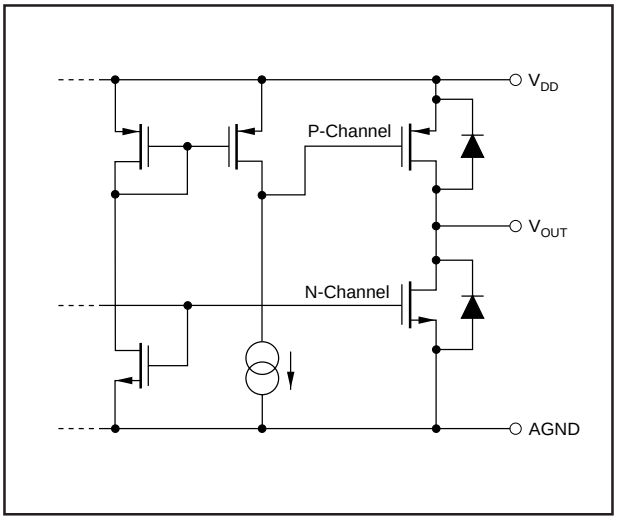

FIGURE 3. Simplified Driver Section of Output Amplifier.

POWER SUPPLY

A BiCMOS process and careful design of the bipolar and CMOS sections of the DAC7611 result in a very low power device. Bipolar transistors are used where tight matching and low noise are needed to achieve analog accuracy, and CMOS transistors are used for logic, switching functions and for other low power stages.

If power consumption is critical, it is important to keep the logic levels on the digital inputs (SDI, CLK, $\overline{CS}$, $\overline{LD}$, $\overline{CLR}$) as close as possible to either V_{DD} or ground. This will keep the CMOS inputs (see "Supply Current vs Logic Input Voltages" in the Typical Performance Curves) from shunting current between V_{DD} and ground. Thus, CMOS logic levels rather than TTL logic levels, are strongly recommended for driving the DAC7611.

The DAC7611 power supply should be bypassed as shown in Figure 1. The bypass capacitors should be placed as close to the device as possible, with the 0.1uF capacitor taking priority in this regard. The Power Supply Rejection vs Frequency graph in the Typical Performance Curves section shows the PSRR performance of the DAC7611. This should be taken into account when using switching power supplies or DC/DC converters.

In addition to offering guaranteed performance with V_{DD} in the 4.75V to 5.25V range, the DAC7611 will operate with reduced performance down to 4.5V. Operation between 4.5V and 4.75V will result in longer settling time, reduced performance, and current sourcing capability. Consult the V_{DD} vs Load Current graph in the Typical Performance Curves section for more information.

APPLICATIONS

POWER AND GROUNDING

The DAC7611 can be used in a wide variety of situations—from low power, battery operated systems to large-scale industrial process control systems. In addition, some applications require better performance than others, or are particularly sensitive to one or two specific parameters. This diversity makes it difficult to define definite rules to follow concerning the power supply, bypassing, and grounding. The following discussion must be considered in relation to the desired performance and needs of the particular system.

A precision analog component requires careful layout, adequate bypassing, and a clean, well-regulated power supply. As the DAC7611 is a single-supply, +5V component, it will often be used in conjunction with digital logic, microcontrollers, microprocessors, and digital signal processors. The more digital logic present in the design and the higher the switching speed, the more difficult it will be to achieve good performance.

Because the DAC7611 has a single ground pin, all return currents, including digital and analog return currents, must flow through this pin. The GND pin is also the ground reference point for the internal bandgap reference. Ideally, GND would be connected directly to an analog ground plane. This plane would be separate from the ground connection for the digital components until they are connected at the power entry point of the system (see Figure 4).

The power applied to V_{DD} should be well regulated and low-noise. Switching power supplies and DC/DC converters will often have high-frequency glitches or spikes riding on the output voltage. In addition, digital components can create similar high frequency spikes as their internal logic switches states. This noise can easily couple into the DAC output voltage through various paths between V_{DD} and V_{OUT}.

As with the GND connection, V_{DD} should be connected to a +5V power supply plane or trace that is separate from the connection for digital logic until they are connected at the power entry point. In addition, the 10µF and 0.1µF capacitors shown in Figure 4 are strongly recommended and should be installed as close to V_{DD} and ground as possible. In some situations, additional bypassing may be required such as a 100µF electrolytic capacitor or even a "Pi" filter made up of inductors and capacitors—all designed to essentially lowpass filter the +5V supply, removing the high frequency noise (see Figure 4).

OFFSET ERROR MEASUREMENT

As with most DACs, the DAC7611 can have an offset error (or zero scale error) which is either negative or positive. If the error is positive, the output voltage for an input code of 000_H will be greater than 0V. If the error is negative, the output voltage is below 0V. However, since the DAC7611 is a single-supply device and cannot swing below ground, the output voltage will be 0V, giving the impression that the offset error is zero.

Since measuring the offset error on a DAC is such a common task, a method is needed to reliably measure the offset error of the DAC7611. This can easily be done as shown in Figure 5. The resistor between V_{OUT} and a negative voltage provides the output amplifier some ability to swing below ground.

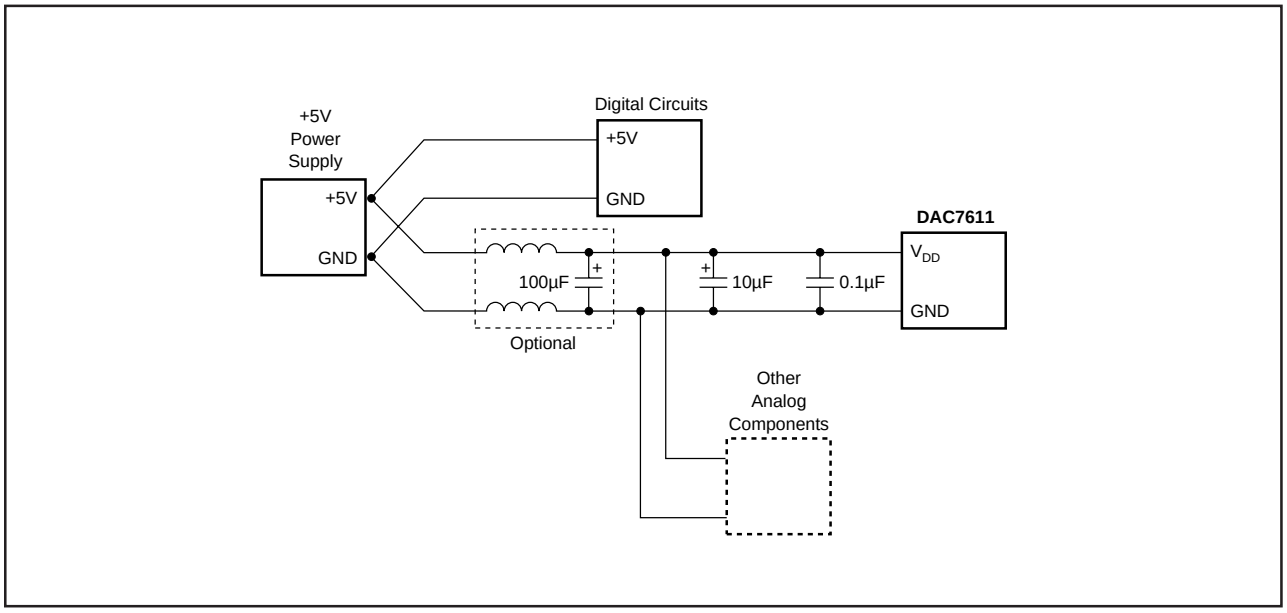

FIGURE 4. Suggested Power and Ground Connections for a DAC7611 Sharing a +5V Supply with a Digital System.

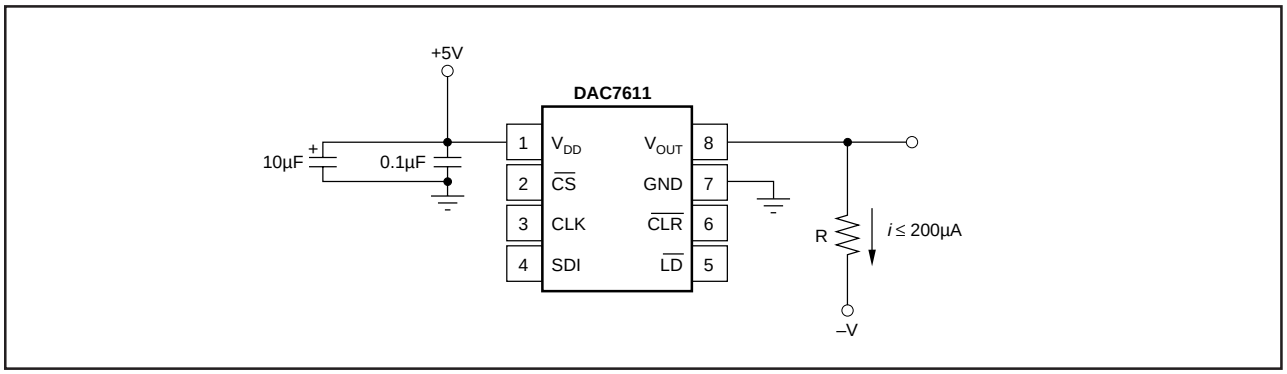

FIGURE 5. Offset Error Measurement Circuit.

This datasheet has been downloaded from:

www.DatasheetCatalog.com

Datasheets for electronic components.

Littlediode supplies new, hard to find or obsolete electronic components and semiconductors all over the world.

With over two million different components listed you are sure to find the part you need.

Feel free to visit us today at our online store:

LittleDiode.com

Looking forward to providing you with the best possible service.