TD62803P STEPPING MOTOR CONTROLLER/DRIVER

Features

- High-Voltage, High-Current Outputs
  $V_{CE}(SUS)\phi$=28V(MIN), $I_{OUT}\phi$=400mA (MAX)
- 1,2, 1-2 Phase Excitation Mode Capable
- 3 Inputs Direction Control .. CK-1, CK-2 CW/CCW
- Output Enable Function ... E
- Initialized Status ..... $\overline{Mo}$ (Monitor out)
- Schmitt Trigger Inputs .... CK-1, CK-2, CW/CCW, $\overline{R}$
- Standard Supply Voltage

Unit in mm

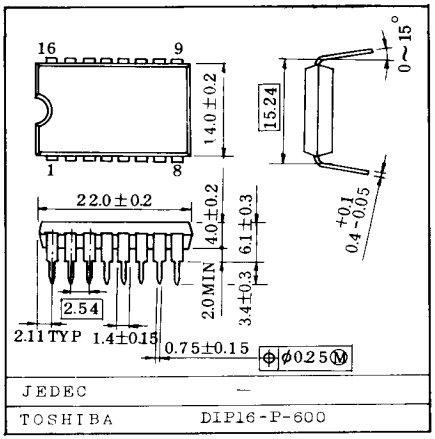

MAXIMUM RATINGS (Ta=25°C unless otherwise noted)

CHARACTERISTIC		SYMBOL	RATING	UNIT
Supply Voltage		V_{CC}	-0.3 ∿ +7.0	V
Output Sustaining Voltage		$V_{CE}(SUS)\phi$	-0.3 ∿ +28	V
Output Current	ϕn	$I_{OUT}\phi$	400	mA
	$\overline{Mo}$, CK-OUT	I_{OUT} $\overline{Mo}$ CK-OUT	10	mA
Input Voltage		V_{IN}	-0.3 ∿ V_{CC}+0.3	V
Input Current		I_{IN}	±1	mA
Power Dissipation		P_D	2.7	W
Operating Temperature		T_{opr}	-30 ∿ +85	°C
Storage Temperature		T_{stg}	-55 ∿ +150	°C

PIN CONNECTION (TOP VIEW)

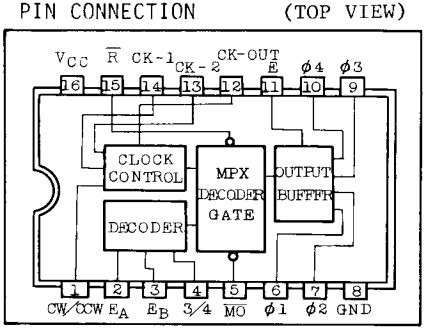

BLOCK DIAGRAM

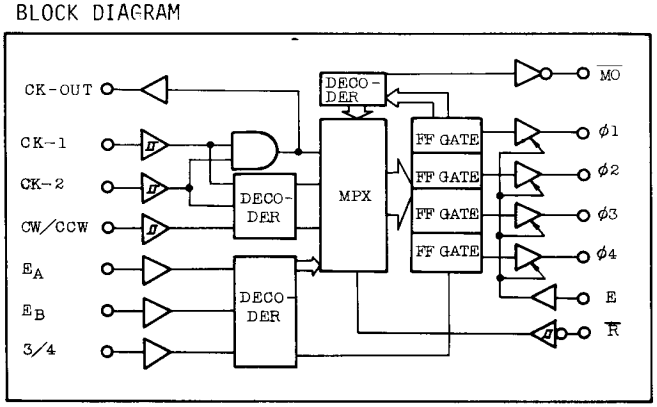

SCHEMATICS OF INPUTS AND OUTPUTS

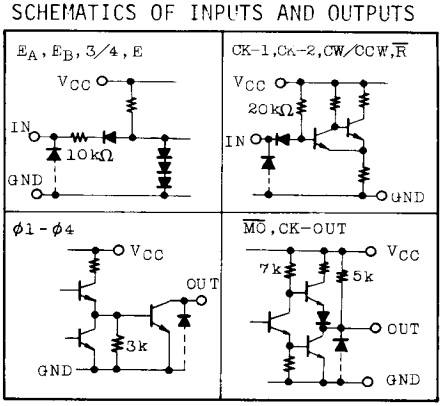

This Material Copyrighted By Its Respective Manufacturer

RECOMMENDED OPERATING CONDITIONS (Ta=-30 ∿ +85°C)

CHARACTERISTIC		SYMBOL	CONDITION	MIN	TYP	MAX	UNIT
Supply Voltage		V_{CC}		4.5	5.0	5.5	V
Output Sustaining Voltage		$V_{CE(SUS)}$		0		26	V
"L" Level Output Current ϕn		$I_{OUT\phi}$				400	mA
			Test Mode			250	
Output Current Mo, CK-OUT	"H" Level	I_{OH}				-0.4	mA
	"L" Level	I_{OL}				8	mA
Input Voltage		V_{IN}		0		V_{CC}	V
Clock Frequency		f_{CK}		0		100	kHz
Power Dissipation		P_D				1.0	W

ELECTRICAL CHARACTERISTICS (Ta=25°C)

CHARACTERISTIC		SYMBOL	TEST CONDITION	MIN	TYP	MAX	UNIT
"H" Level Input Voltage		V_{IH}		2.0			V
"L" Level Input Voltage		V_{IL}				0.8	V
"H" Level Output Current ϕn		$I_{OH\phi}$	V_{CC}=5.5V, V_{OUT}=26V			100	μA
"H" Level Output Voltage $\overline{Mo}$, CK-OUT		V_{OH}	V_{CC}=4.5V, I_{OH}=-0.4mA	2.4			V
			V_{CC}=5.0V I_{OH}=-10μA	4.0			
"L" Level Output Voltage	$\overline{Mo}$, CK-OUT	V_{OL}	V_{CC}=4.5V, I_{OL}=8mA			0.4	V
	ϕn	$V_{OUT\phi}$	V_{CC}=4.5V, I_{OUT}=400mA			1.1	
			V_{CC}=4.5V, I_{OUT}=200mA			0.6	
"H" Level Input Current		I_{IH}	V_{CC}=5.5V, V_{IH}=5.5V			10	μA
"L" Level Input Current		I_{IL}	V_{CC}=5.5V, V_{IL}=0.4V			-0.4	mA
Hysteresis		ΔV_T		200			mV
Supply Current		I_{CC}				100	mA

SWITCHING CHARACTERISTICS (Ta=25°C)

CHARACTERISTIC		SYMBOL	TEST CONDITION	MIN	TYP	MAX	UNIT
Propagation Delay Time, Low-to-High Level	CK-ϕn	t_{pLH}	V_{CC}=5.0V		2.0		μS
	CK-CK-OUT		R_L-CK-OUT, $\overline{Mo}$=620Ω		1.0		
	CK-$\overline{Mo}$		R_L-$\phi_1 \sim \phi_4$=100Ω		2.8		
	E-ϕn		C_L-All Outputs=15pF		1.0		
	$\overline{R}$-ϕn		$V_{OUT\phi}$=24V		2.0		

This Material Copyrighted By Its Respective Manufacturer

SWITCHING CHARACTERISTICS (Ta=25°C)

CHARACTERISTIC		SYMBOL	TEST CONDITION	MIN	TYP	MAX	UNIT
Propagation Delay Time High-to-Low Level	CK-ϕn	t_{pHL}	V_{CC}=5.0V		1.4		μS
	CK—CK-OUT		R_L—CK-OUT, $\overline{Mo}$=620Ω		0.7		
	CK-$\overline{Mo}$		R_L-$\phi_1 \sim \phi_4$=100Ω		2.1		
	E-ϕn		C_L-All Outputs = 15pF		1.2		
	$\overline{R}$-ϕn		$V_{OUT}\phi$=24V		1.0		
	$\overline{R}$-$\overline{Mo}$				2.0		
Maximum Clock Frequency		f_{max}			250		kHz
Set Up Time CK, CW/CCW		t_{set-up}			0.1		μS
Hold Time CK, CW/CCW		t_{hold}			0.1		
Minimum Clock Pulse Width		$t_{w(CK)}$			1.0		
Minimum Reset Pulse Width		$t_{w(\overline{R})}$			1.0		

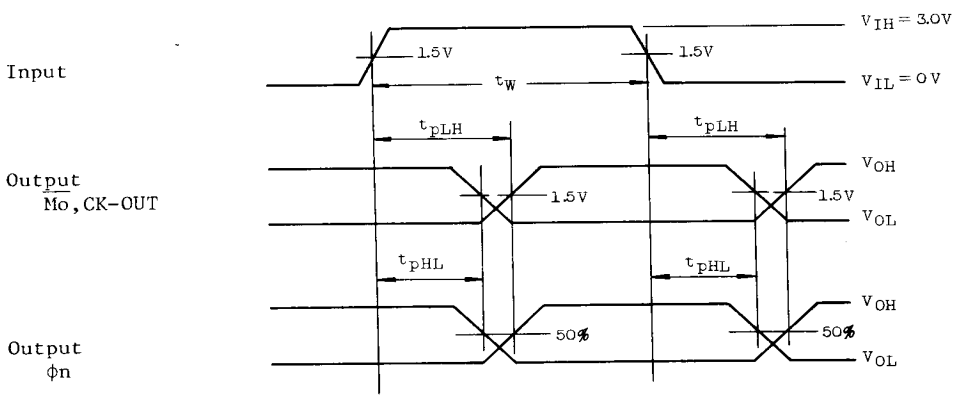

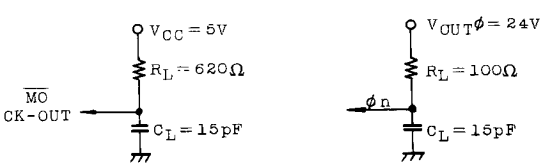

LOAD CIRCUIT

This Material Copyrighted By Its Respective Manufacturer

PIN NAMES AND FUNCTIONS

PIN NO.	SYMBOL	NAME	FUNCTION	
1	CW/CCW	Clock Wise/Counter Clock Wise	Direction Control Input	Function Table A
2	EA	Excitation A	Phase Excitation Mode Input	Function Table B
3	EB	Excitation B		
4	3/4	3 Phases/4 Phases	Phase Control Input	
5	$\overline{Mo}$	Monitor Out	Initial Status Output $\overline{Mo}$="L" at Initial State	
6	ϕ_1	ϕ_1 Out	ϕ_1 Output	
7	ϕ_2	ϕ_2 Out	ϕ_2 Output	
8	GND	GND	GND	
9	ϕ_3	ϕ_3 Out	ϕ_3 Output	
10	ϕ_4	ϕ_4 Out	ϕ_4 Output	
11	E	Output Enable	Outputs are Enable at E="H"	
12	CK-OUT	Clock-Out	Clock Output	
13	CK1	Clock In-1	Clock Input 1	Function Table A
14	CK2	Clock In-2	Clock Input 2	
15	$\overline{R}$	Reset	Reset Input	
16	V_{CC}	V_{CC}	V_{CC}	

FUNCTION TABLE A

CK1	CK2	CW/CCW	FUNCTION
↑	H	L	CW
↑	L	L	Inhibit
H	↑	L	CCW
L	↑	L	Inhibit
↑	H	H	CCW
↑	L	H	Inhibit
H	↑	H	CW
L	↑	H	Inhibit

FUNCTION TABLE B

EA	EB	3/4	FUNCTION	
L	L	L	4 Phases	1 Phase Excitation
H	L	L		2 Phase Excitation
L	H	L		1-2 Phase Excitation
H	H	L	Test Mode	$\phi_1 \sim \phi_4$ ON
L	L	H	3 Phases	1 Phase Excitation
H	L	H		2 Phase Excitation
L	H	H		1-2 Phase Excitation
H	H	H	Test Mode	$\phi_1 \sim \phi_4$ ON

NOTE) Conversion of Phase Excitation Mode must be made after the Reset Mode is established.

This Material Copyrighted By Its Respective Manufacturer

3 PHASES METHOD

1 PHASE EXCITATION CW

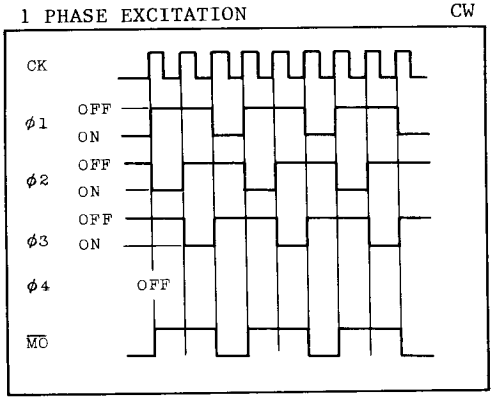

1 PHASE EXCITATION CCW

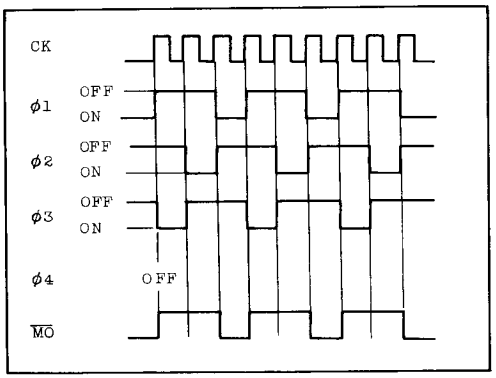

2 PHASE EXCITATION CW

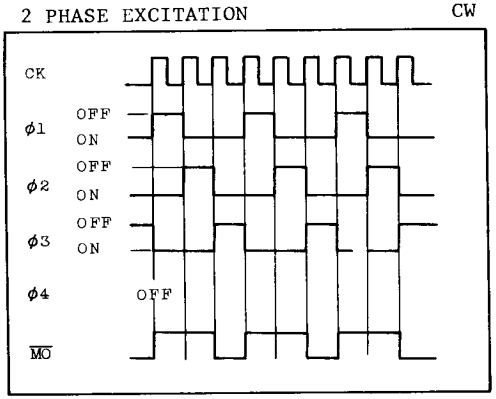

2 PHASE EXCITATION CCW

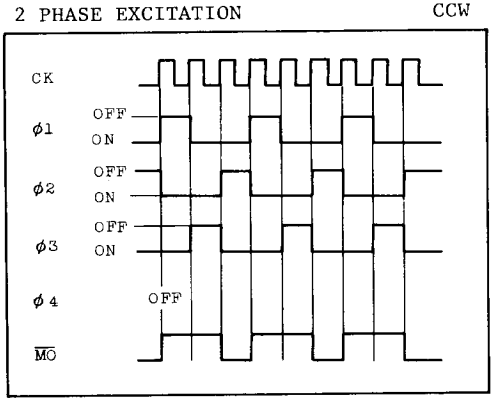

1-2 PHASE EXCITATION CW

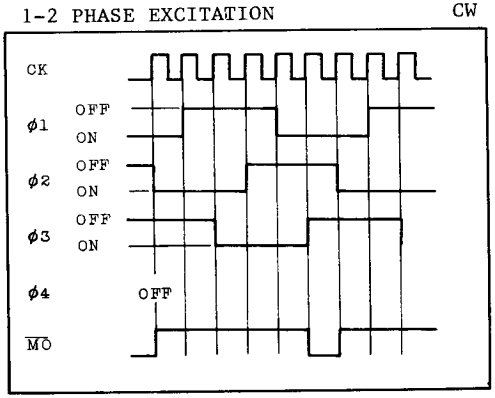

1-2 PHASE EXCITATION CCW

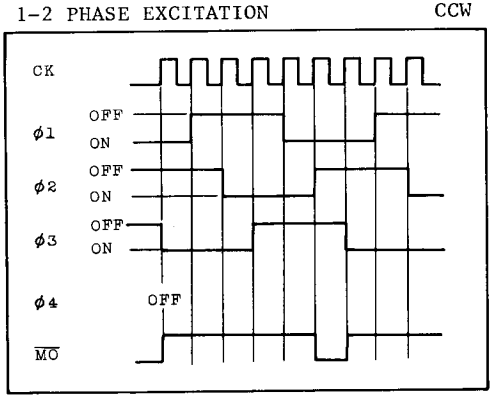

This Material Copyrighted By Its Respective Manufacturer

4 PHASES METHOD

1 PHASE EXCITATION CW

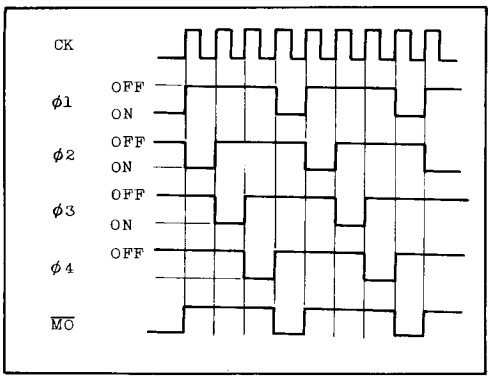

1 PHASE EXCITATION CCW

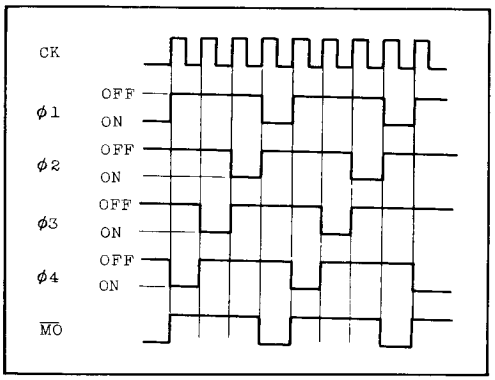

2 PHASE EXCITATION CW

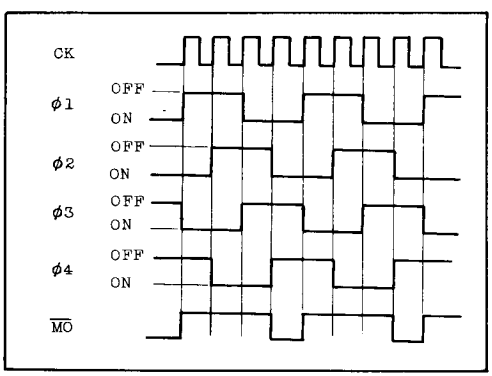

2 PHASE EXCITATION CCW

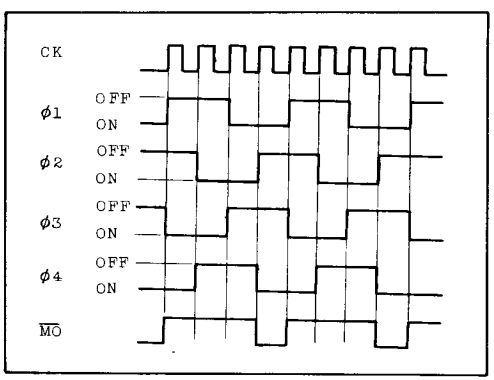

1-2 PHASE EXCITATION CW

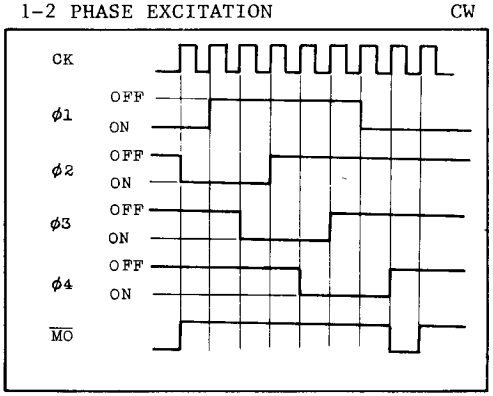

1-2 PHASE EXCITATION CCW

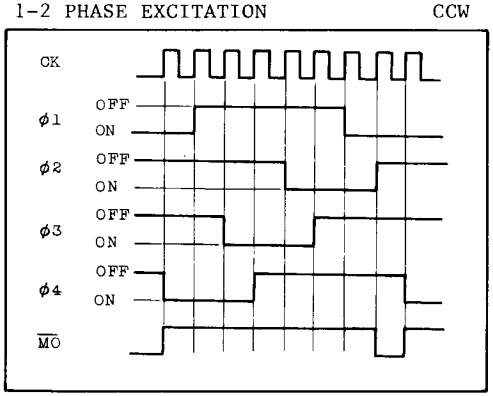

This Material Copyrighted By Its Respective Manufacturer