DATA SHEET

74F393
Dual 4-bit binary ripple counter

Product specification

1988 Nov 01

IC15 Data Handbook

Philips
Semiconductors

PHILIPS

Dual 4-bit binary ripple counter 74F393

FEATURES

- Two 4-bit binary counters
- Two Master Resets to clear each 4-bit counter individually

DESCRIPTION

The 74F393 is a Dual Ripple Counter with separate Clock ($\overline{CP}_n$) and Master Reset (MR) inputs to each counter. The two counters are identified by the “a” and “b” suffixes in the pin configuration. The operation of each half of the 74F393 is the same. The counters are triggered by a High-to-Low transition of the Clock ($\overline{CP}_a$ and $\overline{CP}_b$) inputs. The counter outputs are internally connected to provide Clock inputs to succeeding stages. The outputs of the ripple counter do not change synchronously and should not be used for high speed address decoding. The Master Resets (MR_a and MR_b) are active High asynchronous inputs; one for each 4-bit counter. A High level in the MR input overrides the Clock and sets the outputs Low.

PIN CONFIGURATION

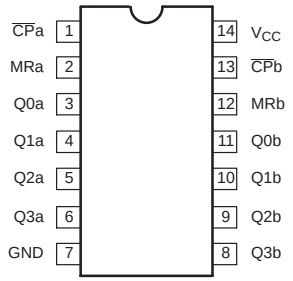

TYPE	TYPICAL f_{MAX}	TYPICAL SUPPLY CURRENT (TOTAL)
74F393	125MHz	40mA

ORDERING INFORMATION

DESCRIPTION	COMMERCIAL RANGE V_{CC} = 5V ±10%, T_{amb} = 0°C to +70°C	PKG DWG #
14-pin plastic DIP	N74F393N	SOT27-1
14-pin plastic SO	N74F393D	SOT108-1

INPUT AND OUTPUT LOADING AND FAN-OUT TABLE

PINS	DESCRIPTION	74F (U.L.) HIGH/LOW	LOAD VALUE HIGH/LOW
$\overline{CP}_a$, $\overline{CP}_b$	Clock inputs	1.0/1.0	20µA/0.6mA
MR_a, MR_b	Master Reset inputs	1.0/1.0	20µA/0.6mA
Q_{na} – Q_{nb}	Data outputs	50/33.3	1.0mA/20mA

NOTE: One (1.0) FAST unit load is defined as: 20µA in the High state and 0.6mA in the Low state.

LOGIC SYMBOL

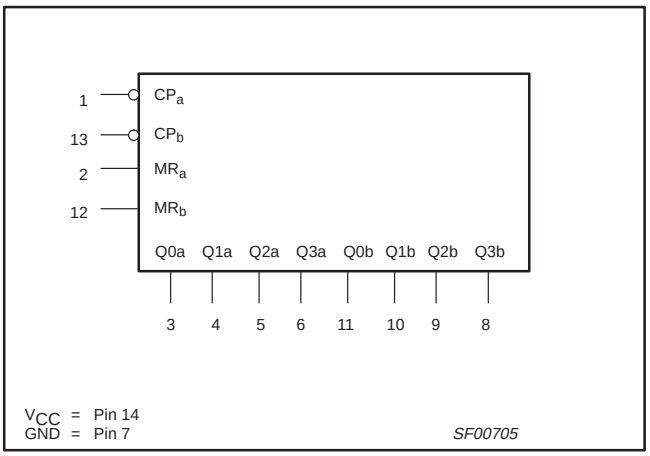

IEC/IEEE SYMBOL (IEEE/IEC)

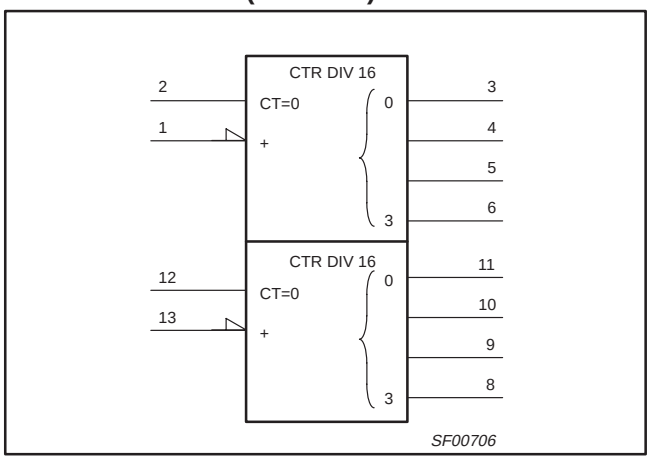

LOGIC DIAGRAM

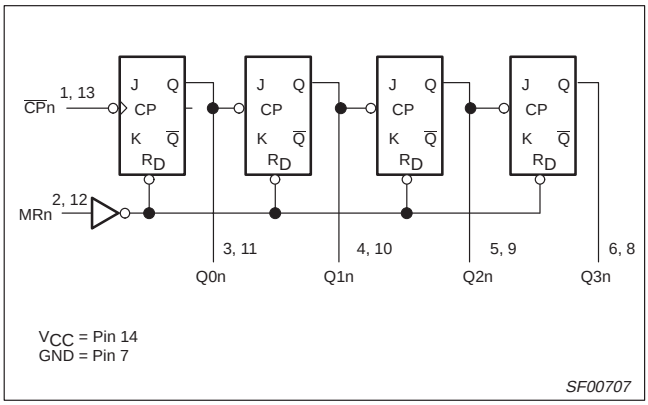

FUNCTION TABLE

COUNT	OUTPUTS			
	Q_{0n}	Q_{1n}	Q_{2n}	Q_{3n}
0	L	L	L	L
1	H	L	L	L
2	L	H	L	L
3	H	H	L	L
4	L	L	H	L
5	H	L	H	L
6	L	H	H	L
7	H	H	H	L
8	L	L	L	H
9	H	L	L	H
10	L	H	L	H
11	H	H	L	H
12	L	L	H	H
13	H	L	H	H
14	L	H	H	H
15	H	H	H	H

H = High voltage level transition
L = Low voltage level

ABSOLUTE MAXIMUM RATINGS

(Operation beyond the limits set forth in this table may impair the useful life of the device.
Unless otherwise noted these limits are over the operating free-air temperature range.)

SYMBOL	PARAMETER	RATING	UNIT
V_{CC}	Supply voltage	–0.5 to +7.0	V
V_{IN}	Input voltage	–0.5 to +7.0	V
I_{IN}	Input current	–30 to +5	mA
V_{OUT}	Voltage applied to output in High output state	–0.5 to V_{CC}	V
I_{OUT}	Current applied to output in Low output state	40	mA
T_{amb}	Operating free-air temperature range	0 to +70	°C
T_{stg}	Storage temperature range	–65 to +150	°C

RECOMMENDED OPERATING CONDITIONS

SYMBOL	PARAMETER	LIMITS			UNIT
		MIN	NOM	MAX	
V_{CC}	Supply voltage	4.5	5.0	5.5	V
V_{IH}	High-level input voltage	2.0			V
V_{IL}	Low-level input voltage			0.8	V
I_{IK}	Input clamp current			–18	mA
I_{OH}	High-level output current			–1	mA
I_{OL}	Low-level output current			20	mA
T_{amb}	Operating free-air temperature range	0		70	°C

DC ELECTRICAL CHARACTERISTICS

(Over recommended operating free-air temperature range unless otherwise noted.)

SYMBOL	PARAMETER		TEST CONDITIONS[1]		LIMITS			UNIT
					MIN	TYP[2]	MAX	
V_{OH}	High-level output voltage		V_{CC} = MIN, V_{IL} = MAX	±10%V_{CC}	2.5			V
			V_{IH} = MIN, I_{OH} = MAX	±5%V_{CC}	2.7	3.4		
V_{OL}	Low-level output voltage		V_{CC} = MIN, V_{IL} = MAX	±10%V_{CC}		0.30	0.50	V
			V_{IH} = MIN, I_{OL} = MAX	±5%V_{CC}		0.30	0.50	
V_{IK}	Input clamp voltage		V_{CC} = MIN, I_I = I_{IK}			–0.73	–1.2	V
I_I	Input current at maximum input voltage		V_{CC} = MAX, V_I = 7.0V				100	µA
I_{IH}	High-level input current		V_{CC} = MAX, V_I = 2.7V				20	µA
I_{IL}	Low-level input current		V_{CC} = MAX, V_I = 0.5V				–0.6	mA
I_{OS}	Short-circuit output current[3]		V_{CC} = MAX		–60		–150	mA
I_{CC}	Supply current (total)	I_{CCH}	V_{CC} = MAX			25	36	mA
		I_{CCL}				42	58	mA

NOTES:

1. For conditions shown as MIN or MAX, use the appropriate value specified under recommended operating conditions for the applicable type.
2. All typical values are at V_{CC} = 5V, T_{amb} = 25°C.
3. Not more than one output should be shorted at a time. For testing I_{OS}, the use of high-speed test apparatus and/or sample-and-hold techniques are preferable in order to minimize internal heating and more accurately reflect operational values. Otherwise, prolonged shorting of a High output may raise the chip temperature well above normal and thereby cause invalid readings in other parameter tests. In any sequence of parameter tests, I_{OS} tests should be performed last.

AC ELECTRICAL CHARACTERISTICS

SYMBOL	PARAMETER	TEST CONDITION	LIMITS					UNIT
			V_{CC} = +5V T_{amb} = +25°C C_L = 50pF, R_L = 500Ω			V_{CC} = +5V ± 10% T_{amb} = 0°C to +70°C C_L = 50pF, R_L = 500Ω		
			MIN	TYP	MAX	MIN	MAX	
f_{MAX}	Maximum clock frequency	Waveform 1	100	130		100		MHz
t_{PLH} t_{PHL}	Propagation delay $\overline{CP}$n to Q0a or Q0b	Waveform 1	3.5 5.0	5.5 7.0	8.0 10.0	3.5 5.0	9.0 10.5	ns
t_{PLH} t_{PHL}	Propagation delay $\overline{CP}$n to Q1a, Q1b	Waveform 1	5.0 7.5	7.0 9.5	10.0 12.0	4.5 7.0	13.0 13.0	ns
t_{PLH} t_{PHL}	Propagation delay $\overline{CP}$n to Q2a, Q2b	Waveform 1	8.0 9.5	10.0 11.5	13.0 14.5	7.0 9.0	15.0 15.5	ns
t_{PLH} t_{PHL}	Propagation delay $\overline{CP}$n to Q3a, Q3b	Waveform 1	10.5 12.0	12.5 14.0	15.5 16.5	10.0 11.5	17.0 17.5	ns
t_{PHL}	Propagation delay MR to Qna, Qnb	Waveform 2	4.0	6.0	9.0	4.0	9.0	ns

AC SETUP REQUIREMENTS

SYMBOL	PARAMETER	TEST CONDITION	LIMITS					UNIT
			V_{CC} = +5V T_{amb} = +25°C C_L = 50pF, R_L = 500Ω			V_{CC} = +5V ± 10% T_{amb} = 0°C to +70°C C_L = 50pF, R_L = 500Ω		
			MIN	TYP	MAX	MIN	MAX	
$t_W(H)$ $t_W(L)$	$\overline{CP}$n Pulse width High or Low	Waveform 1	4.5 3.5			5.0 4.0		ns
$t_W(H)$	MR Pulse width High	Waveform 2	3.5			4.5		ns
t_{REC}	Recovery time MR to $\overline{CP}$n	Waveform 2	2.5			3.0		ns

AC WAVEFORMS

For all waveforms, V_M = 1.5V.

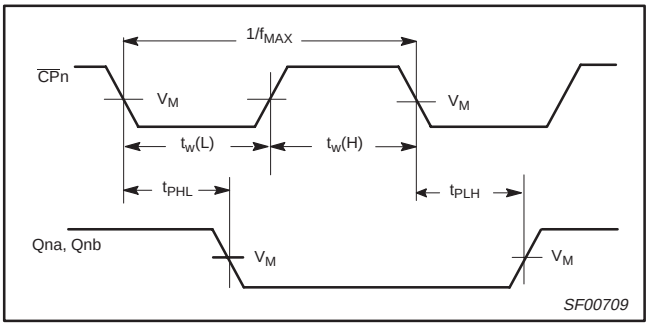

Waveform 1. Propagation Delay, Clock Input to Output, Clock Pulse Width, and Maximum Clock Frequency

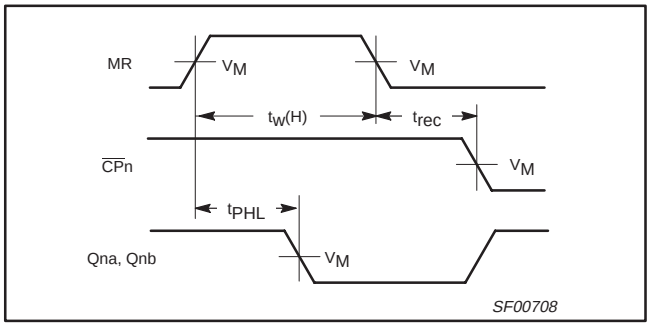

Waveform 2. Master Reset Pulse Width, Master Reset to Output Delay, and Master Reset to Clock Recovery Time

TEST CIRCUIT AND WAVEFORMS

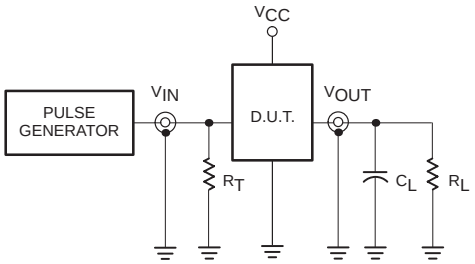

Test Circuit for Totem-Pole Outputs

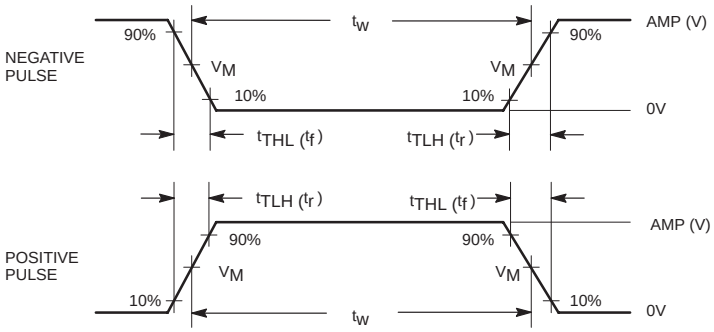

Input Pulse Definition

family	INPUT PULSE REQUIREMENTS					
	amplitude	V_M	rep. rate	t_W	t_{TLH}	t_{THL}
74F	3.0V	1.5V	1MHz	500ns	2.5ns	2.5ns

DEFINITIONS:

R_L = Load resistor; see AC ELECTRICAL CHARACTERISTICS for value.

C_L = Load capacitance includes jig and probe capacitance; see AC ELECTRICAL CHARACTERISTICS for value.

R_T = Termination resistance should be equal to Z_{OUT} of pulse generators.

SF00006

DIP14: plastic dual in-line package; 14 leads (300 mil) SOT27-1

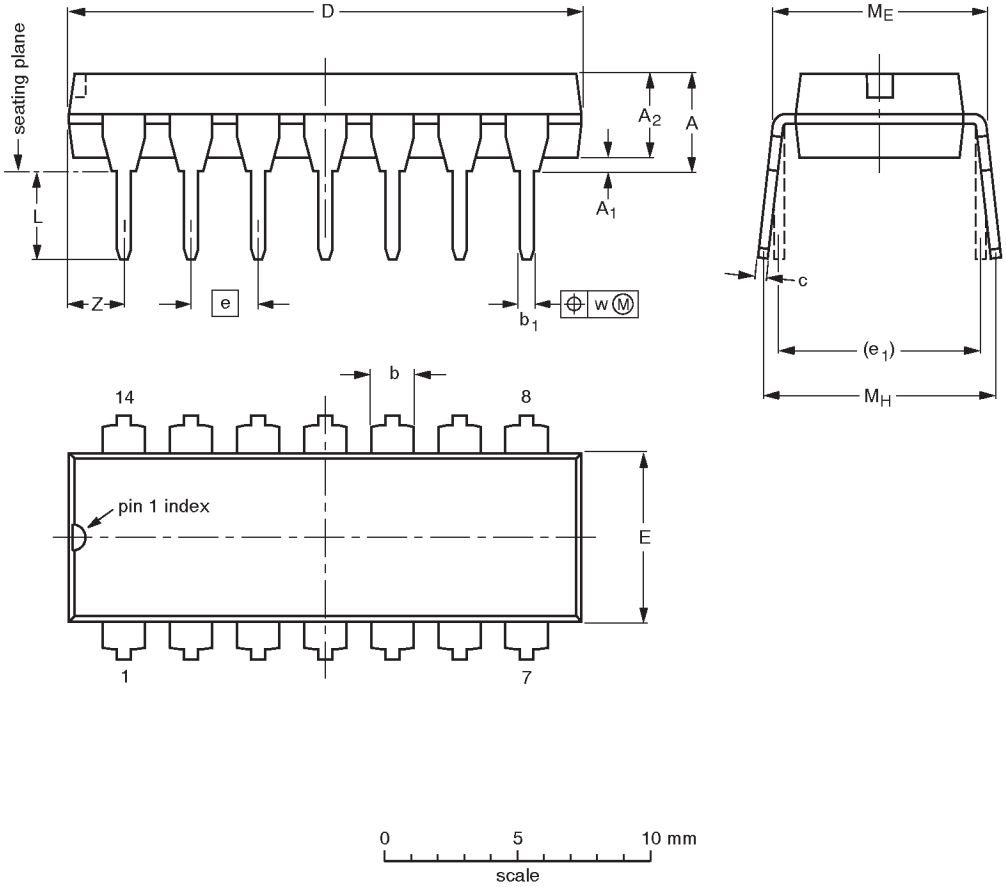

DIMENSIONS (inch dimensions are derived from the original mm dimensions)

UNIT	A max.	A_1 min.	A_2 max.	b	b_1	c	D (1)	E (1)	e	e_1	L	M_E	M_H	w	Z (1) max.
mm	4.2	0.51	3.2	1.73 1.13	0.53 0.38	0.36 0.23	19.50 18.55	6.48 6.20	2.54	7.62	3.60 3.05	8.25 7.80	10.0 8.3	0.254	2.2
inches	0.17	0.020	0.13	0.068 0.044	0.021 0.015	0.014 0.009	0.77 0.73	0.26 0.24	0.10	0.30	0.14 0.12	0.32 0.31	0.39 0.33	0.01	0.087

Note

1. Plastic or metal protrusions of 0.25 mm maximum per side are not included.

OUTLINE VERSION	REFERENCES				EUROPEAN PROJECTION	ISSUE DATE
	IEC	JEDEC	EIAJ			
SOT27-1	050G04	MO-001AA				~~92-11-17~~ 95-03-11

SO14: plastic small outline package; 14 leads; body width 3.9 mm SOT108-1

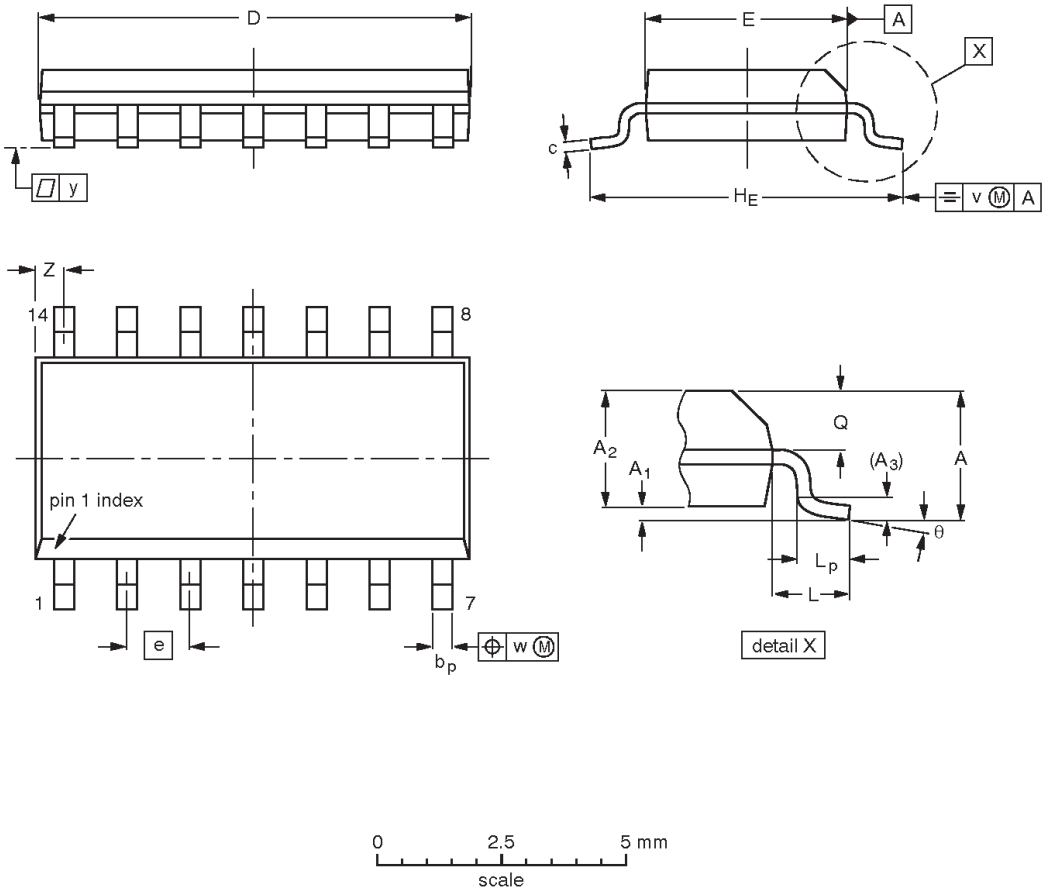

DIMENSIONS (inch dimensions are derived from the original mm dimensions)

UNIT	A max.	A_1	A_2	A_3	b_p	c	D(1)	E(1)	e	H_E	L	L_p	Q	v	w	y	Z(1)	θ
mm	1.75	0.25 0.10	1.45 1.25	0.25	0.49 0.36	0.25 0.19	8.75 8.55	4.0 3.8	1.27	6.2 5.8	1.05	1.0 0.4	0.7 0.6	0.25	0.25	0.1	0.7 0.3	8° 0°
inches	0.069	0.010 0.004	0.057 0.049	0.01	0.019 0.014	0.0100 0.0075	0.35 0.34	0.16 0.15	0.050	0.244 0.228	0.041	0.039 0.016	0.028 0.024	0.01	0.01	0.004	0.028 0.012	

Note

1. Plastic or metal protrusions of 0.15 mm maximum per side are not included.

OUTLINE VERSION	REFERENCES				EUROPEAN PROJECTION	ISSUE DATE
	IEC	JEDEC	EIAJ			
SOT108-1	076E06S	MS-012AB				~~95-01-23~~ 97-05-22

Data sheet status

Data sheet status	Product status	Definition [1]
Objective specification	Development	This data sheet contains the design target or goal specifications for product development. Specification may change in any manner without notice.
Preliminary specification	Qualification	This data sheet contains preliminary data, and supplementary data will be published at a later date. Philips Semiconductors reserves the right to make chages at any time without notice in order to improve design and supply the best possible product.
Product specification	Production	This data sheet contains final specifications. Philips Semiconductors reserves the right to make changes at any time without notice in order to improve design and supply the best possible product.

[1] Please consult the most recently issued datasheet before initiating or completing a design.

Definitions

Short-form specification — The data in a short-form specification is extracted from a full data sheet with the same type number and title. For detailed information see the relevant data sheet or data handbook.

Limiting values definition — Limiting values given are in accordance with the Absolute Maximum Rating System (IEC 134). Stress above one or more of the limiting values may cause permanent damage to the device. These are stress ratings only and operation of the device at these or at any other conditions above those given in the Characteristics sections of the specification is not implied. Exposure to limiting values for extended periods may affect device reliability.

Application information — Applications that are described herein for any of these products are for illustrative purposes only. Philips Semiconductors make no representation or warranty that such applications will be suitable for the specified use without further testing or modification.

Disclaimers

Life support — These products are not designed for use in life support appliances, devices or systems where malfunction of these products can reasonably be expected to result in personal injury. Philips Semiconductors customers using or selling these products for use in such applications do so at their own risk and agree to fully indemnify Philips Semiconductors for any damages resulting from such application.

Right to make changes — Philips Semiconductors reserves the right to make changes, without notice, in the products, including circuits, standard cells, and/or software, described or contained herein in order to improve design and/or performance. Philips Semiconductors assumes no responsibility or liability for the use of any of these products, conveys no license or title under any patent, copyright, or mask work right to these products, and makes no representations or warranties that these products are free from patent, copyright, or mask work right infringement, unless otherwise specified.

Philips Semiconductors
811 East Arques Avenue
P.O. Box 3409
Sunnyvale, California 94088–3409
Telephone 800-234-7381

© Copyright Philips Electronics North America Corporation 1998
All rights reserved. Printed in U.S.A.

print code Date of release: 10-98

Document order number: 9397-750-05125

Let's make things better.

Philips Semiconductors

PHILIPS

Littlediode supplies new, hard to find or obsolete electronic components and semiconductors all over the world.

With over two million different components listed you are sure to find the part you need.

Feel free to visit us today at our online store:

LittleDiode.com

Looking forward to providing you with the best possible service.