HCS360

KEELOQ™ Code Hopping Encoder

FEATURES

Security

- Programmable 28/32-bit serial number
- Programmable 64-bit encryption key
- Each transmission is unique
- 67-bit transmission code length
- 32-bit hopping code
- 35-bit fixed code (28/32-bit serial number, 4/0-bit function code, 1-bit status, 2-bit CRC)
- Encryption keys are read protected

Operating

- 2.0-6.6V operation
- Four button inputs
  - 15 functions available
- Selectable baud rate
- Automatic code word completion
- Battery low signal transmitted to receiver
- Nonvolatile synchronization data
- PWM and Manchester modulation

Other

- Easy to use programming interface
- On-chip EEPROM
- On-chip oscillator and timing components
- Button inputs have internal pull-down resistors
- Current limiting on $\overline{LED}$ output
- Minimum component count

Enhanced Features Over HCS300

- 48-bit seed vs. 32-bit seed
- 2-bit CRC for error detection
- 28/32-bit serial number select
- Two seed transmission methods
- PWM and Manchester modulation
- IR modulation mode

Typical Applications

The HCS360 is ideal for Remote Keyless Entry (RKE) applications. These applications include:

- Automotive RKE systems
- Automotive alarm systems
- Automotive immobilizers
- Gate and garage door openers
- Identity tokens
- Burglar alarm systems

PACKAGE TYPES

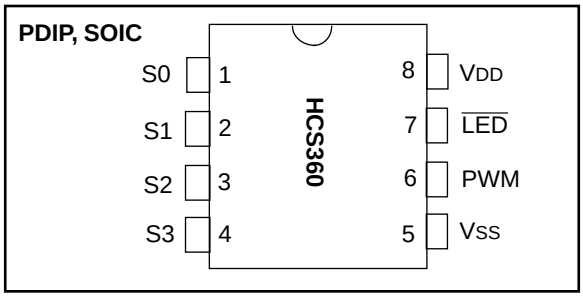

HCS360 BLOCK DIAGRAM

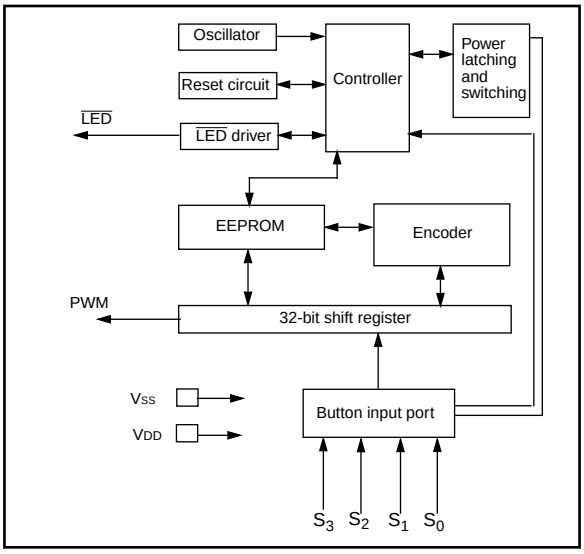

DESCRIPTION

The HCS360 is a code hopping encoder designed for secure Remote Keyless Entry (RKE) systems. The HCS360 utilizes the KEELOQ code hopping technology, which incorporates high security, a small package outline and low cost, to make this device a perfect solution for unidirectional remote keyless entry systems and access control systems.

The HCS360 combines a 32-bit hopping code generated by a nonlinear encryption algorithm, with a 28/32-bit serial number and 7/3 status bits to create a 67-bit transmission stream. The length of the transmission eliminates the threat of code scanning and the code hopping mechanism makes each transmission unique, thus rendering code capture and resend (code grabbing) schemes useless.

KEELOQ is a registered trademark of Microchip Technology Inc.
*Code hopping encoder patents issued in Europe, U. S. A., R. S. A. — US: 5,517,187; Europe: 0459781

© 1996 Microchip Technology Inc.

The encryption key, serial number, and configuration data are stored in EEPROM which is not accessible via any external connection. This makes the HCS360 a very secure unit. The HCS360 provides an easy to use serial interface for programming the necessary security keys, system parameters, and configuration data.

The encryption keys and code combinations are programmable but read-protected. The keys can only be verified after an automatic erase and programming operation. This protects against attempts to gain access to keys and manipulate synchronization values.

The HCS360 operates over a wide voltage range of 2.0V to 6.6V and has four button inputs in an 8-pin configuration. This allows the system designer the freedom to utilize up to 15 functions. The only components required for device operation are the buttons and RF circuitry, allowing a very low system cost.

1.0 SYSTEM OVERVIEW

1.1 Key Terms

- Manufacturer's code – a 64-bit word, unique to each manufacturer, used to produce a unique encryption key in each transmitter (encoder).
- Encryption Key – a unique 64-bit key generated and programmed into the encoder during the manufacturing process. The encryption key controls the encryption algorithm and is stored in EEPROM on the encoder device.
- Learn – The HCS product family facilitates several learning strategies to be implemented on the decoder. The following are examples of what can be done.

  Normal Learning

  The receiver uses the same information that is transmitted during normal operation to derive the transmitter's secret key, decrypt the discrimination value and the synchronization counter.

  Secure Learn*

  The transmitter is activated through a special button combination to transmit a stored 48-bit value (random seed) that can be used for key generation or be part of the key. Transmission of the random seed can be disabled after learning is completed.

The HCS360 is a code hopping encoder device that is designed specifically for keyless entry systems, primarily for vehicles and home garage door openers. It is meant to be a cost-effective, yet secure solution to such systems. The encoder portion of a keyless entry system is meant to be held by the user and operated to gain access to a vehicle or restricted area. The HCS360 requires very few external components (Figure 2-1).

Most keyless entry systems transmit the same code from a transmitter every time a button is pushed. The relative number of code combinations for a low end system is also a relatively small number. These shortcomings provide the means for a sophisticated thief to create a device that 'grabs' a transmission and retransmits it later or a device that scans all possible combinations until the correct one is found.

The HCS360 employs the KEELOQ code hopping technology and an encryption algorithm to achieve a high level of security. Code hopping is a method by which the code transmitted from the transmitter to the receiver is different every time a button is pushed. This method, coupled with a transmission length of 67 bits, virtually eliminates the use of code 'grabbing' or code 'scanning'.

As indicated in the block diagram on page one, the HCS360 has a small EEPROM array which must be loaded with several parameters before use. The most important of these values are:

- A 28/32-bit serial number which is meant to be unique for every encoder
- An encryption key that is generated at the time of production
- A 16-bit synchronization value

The serial number for each transmitter is programmed by the manufacturer at the time of production. The generation of the encryption key is done using a key generation algorithm (Figure 1-1). Typically, inputs to the key generation algorithm are the serial number of the transmitter or seed value, and a 64-bit manufacturer's code. The manufacturer's code is chosen by the system manufacturer and must be carefully controlled. The manufacturer's code is a pivotal part of the overall system security.

The 16-bit synchronization value is the basis for the transmitted code changing for each transmission, and is updated each time a button is pressed. Because of the complexity of the code hopping encryption algorithm, a change in one bit of the synchronization value will result in a large change in the actual transmitted code. There is a relationship (Figure 1-2) between the key values in EEPROM and how they are used in the encoder. Once the encoder detects that a button has been pressed, the encoder reads the button and updates the synchronization counter. The synchronization value is then combined with the encryption key in the encryption algorithm and the output is 32 bits of encrypted information. This data will change with every button press, hence, it is referred to as the hopping portion of the code word. The 32-bit hopping code is combined with the button information and the serial number to form the code word transmitted to the receiver. The code word format is explained in detail in Section 4.2.

*Secure Learning patents pending.

 © 1996 Microchip Technology Inc.

Any type of controller may be used as a receiver, but it is typically a microcontroller with compatible firmware that allows the receiver to operate in conjunction with a transmitter, based on the HCS360. Section 7.0 provides more detail on integrating the HCS360 into a total system.

Before a transmitter can be used with a particular receiver, the transmitter must be 'learned' by the receiver. Upon learning a transmitter, information is stored by the receiver so that it may track the transmitter, including the serial number of the transmitter, the current synchronization value for that transmitter and the same encryption key that is used on the transmitter. If a receiver receives a message of valid format, the serial number is checked and, if it is from a learned transmitter, the message is decrypted and the decrypted synchronization counter is checked against what is stored. If the synchronization value is verified, then the button status is checked to see what operation is needed. Figure 1-3 shows the relationship between some of the values stored by the receiver and the values received from the transmitter.

FIGURE 1-1: CREATION AND STORAGE OF ENCRYPTION KEY DURING PRODUCTION

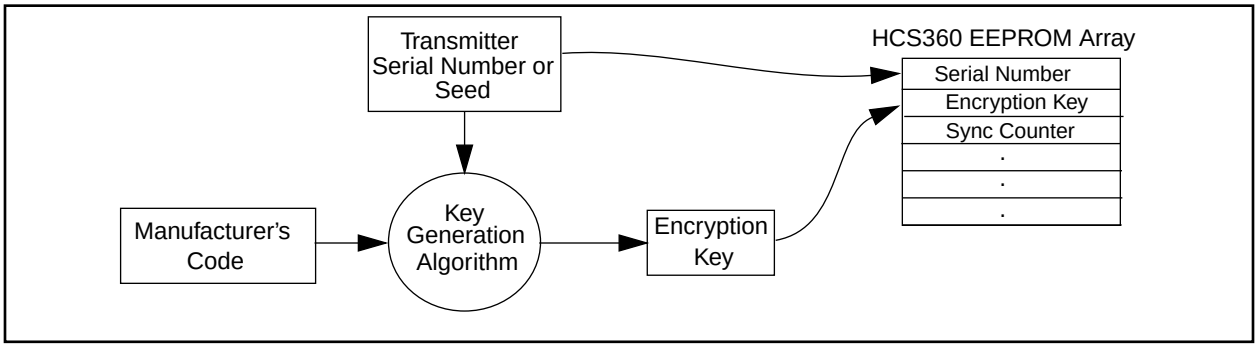

FIGURE 1-2: BASIC OPERATION OF TRANSMITTER (ENCODER)

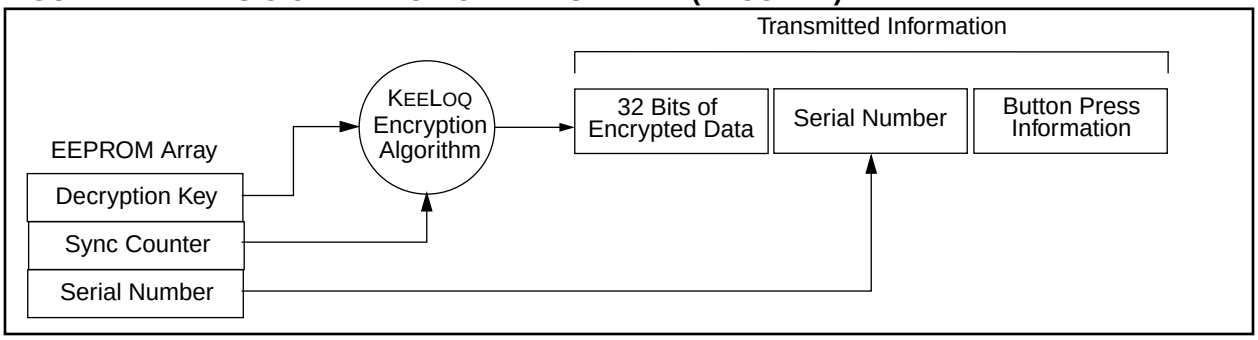

FIGURE 1-3: BASIC OPERATION OF RECEIVER (DECODER)

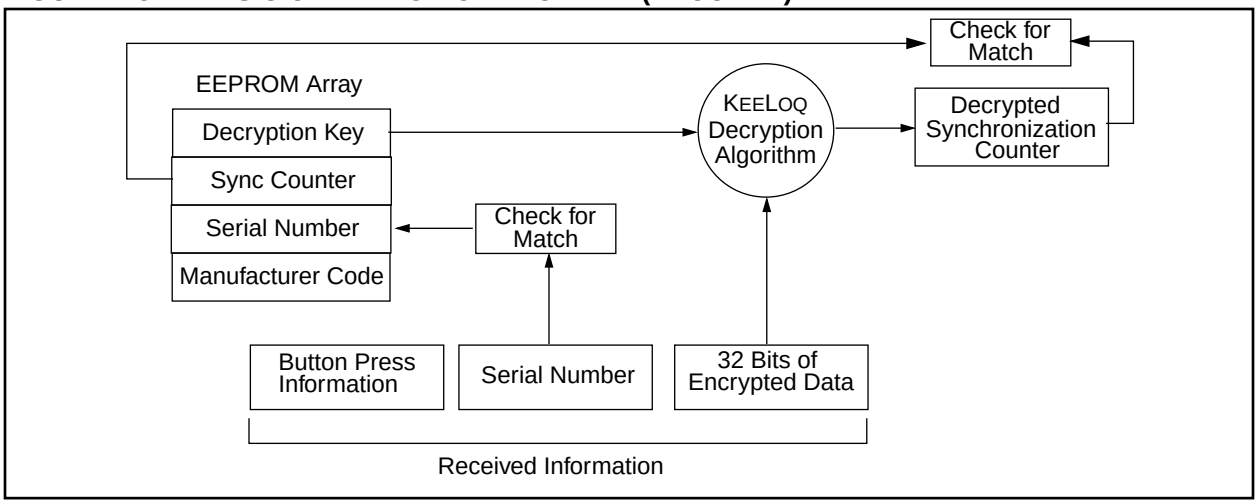

2.0 DEVICE OPERATION

As shown in the typical application circuits (Figure 2-1), the HCS360 is a simple device to use. It requires only the addition of buttons and RF circuitry for use as the transmitter in your security application. A description of each pin is described in Table 2-1.

FIGURE 2-1: TYPICAL CIRCUITS

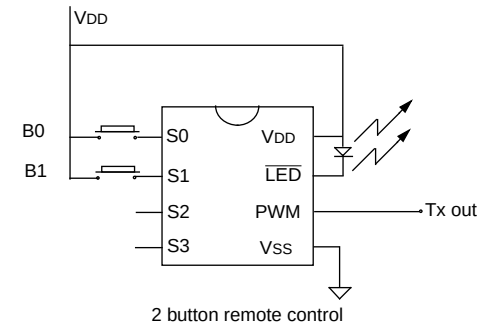

2 button remote control

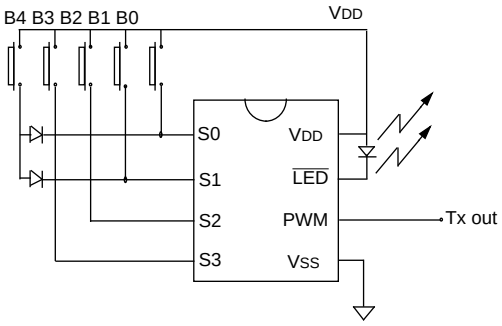

5 button remote control (Note)

Note: Up to 15 functions can be implemented by pressing more than one button simultaneously or by using a suitable diode array.

TABLE 2-1 PIN DESCRIPTIONS

Name	Pin Number	Description
S0	1	Switch input 0
S1	2	Switch input 1
S2	3	Switch input 2/Can also be clock pin when in programming mode
S3	4	Switch input 3/Clock pin when in programming mode
VSS	5	Ground reference connection
PWM	6	Pulse width modulation (PWM) output pin/Data pin for programming mode
$\overline{LED}$	7	Cathode connection for directly driving $\overline{LED}$ during transmission
VDD	8	Positive supply voltage connection

The high security level of the HCS360 is based on the patented KEELOQ technology. A block cipher type of encryption algorithm based on a block length of 32 bits and a key length of 64 bits is used. The algorithm obscures the information in such a way that even if the transmission information (before coding) differs by only one bit from the information in the previous transmission, the next coded transmission will be totally different. Statistically, if only one bit in the 32-bit string of information changes, approximately 50 percent of the coded transmission will change. The HCS360 will wake up upon detecting a switch closure and then delay approximately 6.5 ms for switch debounce (Figure 2-2). The synchronization information, fixed information, and switch information will be encrypted to form the hopping code. The encrypted or hopping code portion of the transmission will change every time a button is pressed, even if the same button is pushed again. Keeping a button pressed for a long time will result in the same code word being transmitted until the button is released or time-out occurs. A code that has been transmitted will not occur again for more than 64K transmissions. This will provide more than 18 years of typical use before a code is repeated based on 10 operations per day. Overflow information programmed into the encoder can be used by the decoder to extend the number of unique transmissions to more than 128K.

If, in the transmit process, it is detected that a new button(s) has been pressed, a reset will immediately be forced and the code word will not be completed. Please note that buttons removed will not have any effect on the code word unless no buttons remain pressed in which case the current code word will be completed and the power down will occur.

 © 1996 Microchip Technology Inc.

FIGURE 2-2: ENCODER OPERATION

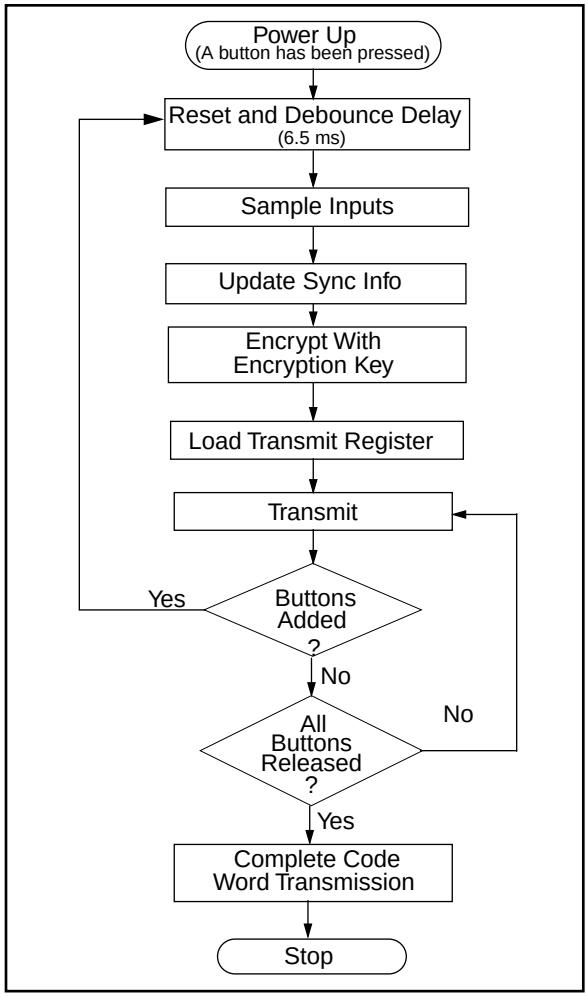

3.0 EEPROM MEMORY ORGANIZATION

The HCS360 contains 192 bits (12 x 16-bit words) of EEPROM memory (Table 3-1). This EEPROM array is used to store the encryption key information, synchronization value, etc. Further descriptions of the memory array is given in the following sections.

TABLE 3-1 EEPROM MEMORY MAP

WORD ADDRESS	MNEMONIC	DESCRIPTION
0	KEY_0	64-bit encryption key (word 0)
1	KEY_1	64-bit encryption key (word 1)
2	KEY_2	64-bit encryption key (word 2)
3	KEY_3	64-bit encryption key (word 3)
4	SYNC_A	16-bit synchronization value
5	SYNC_B/SEED_2	16-bit synchronization or seed value (word 2)
6	RESERVED	Set to 0000H
7	SEED_0	Seed Value (word 0)
8	SEED_1	Seed Value (word 1)
7	SER_0	Device Serial Number (word 0)
10	SER_1	Device Serial Number (word 1)
11	CONFIG	Configuration Word

3.1 Key_0 - Key_3 (64-Bit Encryption Key)

The 64-bit encryption key is used by the transmitter to create the encrypted message transmitted to the receiver. This key is created and programmed at the time of production using a key generation algorithm. Inputs to the key generation algorithm are the serial number for the particular transmitter being used and a secret manufacturer's code. While the key generation algorithm supplied from Microchip is the typical method used, a user may elect to create their own method of key generation. This may be done providing that the decoder is programmed with the same means of creating the key for decryption purposes. If a seed is used, the seed will also form part of the input to the key generation algorithm.

3.2 SYNC_A, SYNC_B (Synchronization Counter)

This is the 16-bit synchronization value that is used to create the hopping code for transmission. This value will be changed after every transmission. A second synchronization value can be used to stay synchronized with a second receiver.

3.3 SEED_0, SEED_1, and SEED_2 (Seed Word)

This is the three word (48 bits) seed code that will be transmitted when seed transmission is selected. This allows the system designer to implement the secure learn feature or use this fixed code word as part of a different key generation/tracking process or purely as a fixed code transmission.

3.4 SER_0, SER_1 (Encoder Serial Number)

SER_0 and SER_1 are the lower and upper words of the device serial number, respectively. There are 32 bits allocated for the serial number and a selectable configuration bit determines whether 32 or 28 bits will be transmitted. The serial number is meant to be unique for every transmitter.

3.5 CONFIG (Configuration Word)

The configuration word is a 16-bit word stored in EEPROM array that is used by the device to store information used during the encryption process, as well as the status of option configurations. Further explanations of each of the bits are described in the following sections.

TABLE 3-2 CONFIGURATION WORD

Bit Number	Symbol	Bit Description
0	LNGRD	Long Guard Time
1	FAST 0	Baud Rate Selection
2	FAST 1	Baud Rate Selection
3	NU	Not Used
4	SEED	Seed Transmission enable
5	DELM	Delay mode enable
6	TIMO	Time out enable
7	IND	Independent mode enable
8	USRA0	User bit
9	USRA1	User bit
10	USRB0	User bit
11	USRB1	User bit
12	XSER	Extended serial number enable
13	TMPSD	Temporary seed transmission enable
14	MANCH	Manchester/PWM modulation selection
15	OVR	Overflow bit

3.5.1 LNGRD: LONG GUARD TIME

LNGRD = 1 selects the encoder to extend the guard time between code words. This can be used to reduce the average power transmitted over a 100ms window and thereby transmit a higher peak power.

3.5.2 FAST 1, FAST 0 BAUD RATE SELECTION

FAST 1 and FAST 0 selects the baud rate according to Table 3-3.

TABLE 3-3 BAUD RATE SELECTION

T_E	FAST 1	FAST 0
400	0	0
200	0	1
200	1	0
100	1	1

 © 1996 Microchip Technology Inc.

3.5.3 SEED: ENABLE SEED TRANSMISSION

If SEED = 0, seed transmission is disabled. The independent counter mode can only be used with seed transmission disabled since SEED_2 is shared with the second synchronization counter.

With SEED = 1, seed transmission is enabled. The appropriate button code(s) must be activated to transmit the seed information. In this mode, the seed information (SEED_0, SEED_1, and SEED_2) and the upper 12- or 16-bits of the serial number (SER_1) are transmitted instead of the hop code.

Seed transmission is available for function codes (Table 3-7) S[3:0] = 1001 and S[3:0] = 0011(delayed). This takes place regardless of the setting of the IND bit. The two seed transmissions are shown in Figure 3-1.

FIGURE 3-1: SEED TRANSMISSION

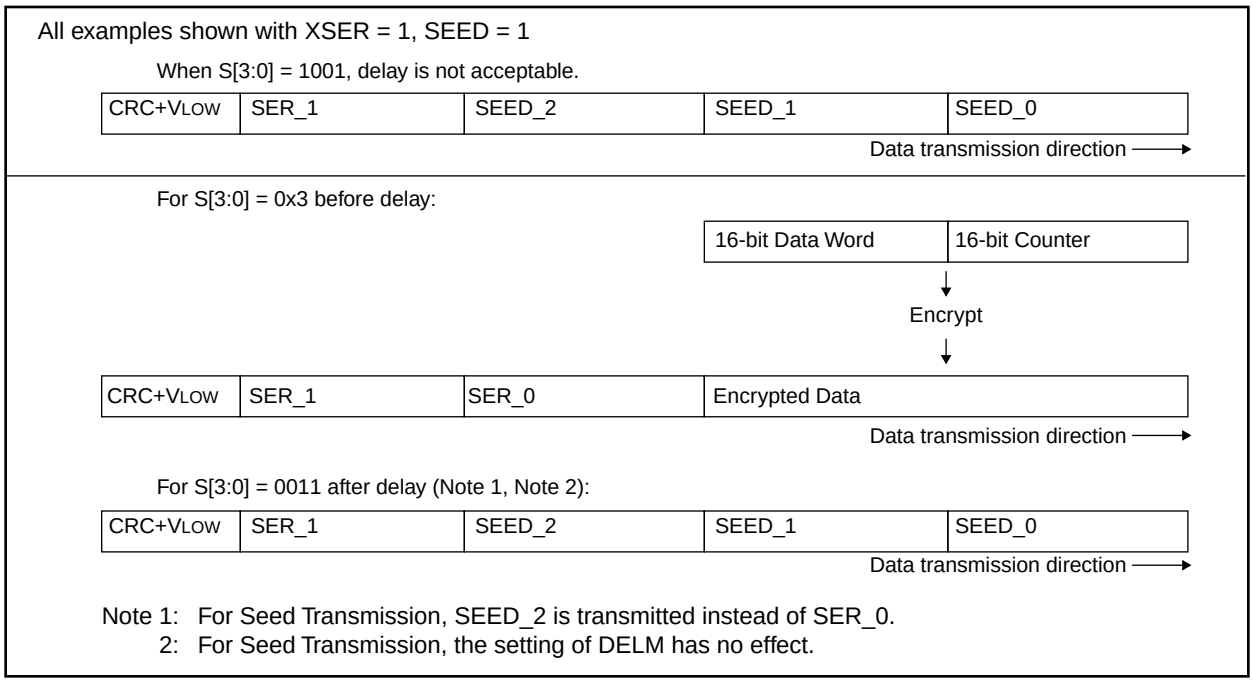

Note 1: For Seed Transmission, SEED_2 is transmitted instead of SER_0.
2: For Seed Transmission, the setting of DELM has no effect.

3.5.4 DELM: DELAY MODE

If DELM = 1, delay transmission is enabled. A delayed transmission is indicated by inverting the lower nibble of the discrimination value. The delay mode is primarily for compatibility with previous KEELOQ devices. If DELM = 0, delay transmission is disabled (Table 3-4).

3.5.5 TIMO: TIME-OUT

If TIMO = 1, the time-out is enabled. Time-out can be used to terminate accidental continuous transmissions. When time-out occurs, the PWM output is set low and the LED is turned off. Current consumption will be higher than in standby mode since current will flow through the activated input resistors. This state can be exited only after all inputs are taken low. TIMO = 0, will enable continuous transmission (Table 3-5).

TABLE 3-4 TYPICAL DELAY TIMES

FAST1	FAST0	Number of Code Words before Delay Mode	Time Before Delay Mode (MANCH = 0)	Time Ref Delay Mode (MANCH = 1)
0	0	28	≈ 2.9s	≈ 5.1s
0	1	56	≈ 3.1s	≈ 6.4s
1	0	28	≈ 1.5s	≈ 3.2s
1	1	56	≈ 1.7s	≈ 4.5s

TABLE 3-5 TYPICAL TIME-OUT TIMES

FAST 1	FAST 0	Maximum Number of Code Words Transmitted	Time Before Time-out (MANCH = 0)	Time Before Time-out (MANCH = 1)
0	0	256	≈ 26.5s	≈ 46.9
0	1	512	≈ 28.2s	≈ 58.4
1	0	256	≈ 14.1s	≈ 29.2
1	1	512	≈ 15.7s	≈ 40.7

 © 1996 Microchip Technology Inc.

3.5.6 IND: INDEPENDENT MODE

The independent mode can be used where one encoder is used to control two receivers. Two counters (SYNC_A and SYNC_B) are used in independent mode. As indicated in Table 3-7, function codes 1 to 7 use SYNC_A and 8 to 15 SYNC_B. The independent mode also selects IR mode. In IR mode function codes 12 to 15 will use SYNC_B. The PWM output signal is modulated with a 40 kHz carrier. It must be pointed out the 40 kHz is derived from the internal clock and will therefore vary with the same percentage as the baud rate. If IND = 0, SYNC_A is used for all function codes. If IND = 1, independent mode is enabled and counters for functions are used according to Table 3-7.

For IND = 1 and S[3:0] ≡ 0xC, 0xD, 0xE, 0xF, Basic Pulse Width modulation becomes:

3.5.7 USRA,B: USER BITS

User bits form part of the discrimination value. The user bits together with the IND bit can be used to identify the counter that is used in independent mode.

3.5.8 XSER: EXTENDED SERIAL NUMBER

If XSER = 1, the full 32-bit serial number [SER_1, SER_0] is transmitted. If XSER = 0, the four most significant bits of the serial number are substituted by S[3:0] and is compatible with the HCS200/300/301.

3.5.9 TMPSD: TEMPORARY SEED TRANSMISSION

The temporary seed transmission can be used to disable learning after the transmitter has been used for a programmable number of operations. This feature can be used to implement very secure systems. After learning is disabled, the seed information cannot be accessed even if physical access to the transmitter is possible. If TMPSD = 1 the seed transmission will be disabled after a number of code hopping transmissions. The number of transmissions before seed transmission is disabled, can be programmed by setting the synchronization counter (SYNC_A, SYNC_B) to a value as shown in Table .

TABLE 3-6 SYNCHRONOUS COUNTER INITIALIZATION VALUES

Synchronous Counter Values	Number of Transmissions
0000H	128
0060H	64
0050H	32
0048H	16

TABLE 3-7 FUNCTION CODES

	S3	S2	S1	S0	IND = 0	IND = 1	Comments
					Counter		
1	0	0	0	1	A	A	
2	0	0	1	0	A	A	
3	0	0	1	1	A	A	If SEED = 1, transmit seed after delay.
4	0	1	0	0	A	A	
5	0	1	0	1	A	A	
6	0	1	1	0	A	A	
7	0	1	1	1	A	A	
8	1	0	0	0	A	B	
9	1	0	0	1	A	B	If SEED = 1, transmit seed immediately.
10	1	0	1	0	A	B	
11	1	0	1	1	A	B	
12	1	1	0	0	A	B IR mode	
13	1	1	0	1	A	B IR mode	
14	1	1	1	0	A	B IR mode	
15	1	1	1	1	A	B IR mode	

3.5.10 MANCH: MANCHESTER CODE MODULATION

MANCH selects between Manchester code modulation and PWM modulation. If MANCH = 1, Manchester code modulation is selected:

If MANCH = 0, PWM modulation is selected.

3.5.11 OVR: OVERFLOW

The overflow bit is used to extend the number of possible synchronization values. The synchronization counter is 16 bits in length, yielding 65,536 values before the cycle repeats. Under typical use of 10 operations a day, this will provide nearly 18 years of use before a repeated value will be used. Should the system designer conclude that is not adequate, then the overflow bit can be utilized to extend the number of unique values. This can be done by programming OVR to 1 at the time of production. The encoder will automatically clear OVR the first time that the transmitted synchronization value wraps from 0xFFFF to 0x0000. Once cleared, OVR cannot be set again, thereby creating a permanent record of the counter overflow. This prevents fast cycling of 64K counter. If the decoder system is programmed to track the overflow bits, then the effective number of unique synchronization values can be extended to 128K. If programmed to zero, the system will be compatible with the NTQ104/5/6 devices (i.e., no overflow with discrimination bits set to zero).

4.0 TRANSMITTED WORD

4.1 Transmission Format (PWM)

The HCS360 transmission is made up of several parts (Figure 4-1 and Figure 4-2). Each transmission is begun with a preamble and a header, followed by the encrypted and then the fixed data. The actual data is 67 bits which consists of 32 bits of encrypted data and 35 bits of fixed data. Each transmission is followed by a guard period before another transmission can begin. Refer to Table 8-4 and Table 8-5 for transmission timing specifications. The encrypted portion provides up to four billion changing code combinations and includes the function bits (based on which buttons were activated) along with the synchronization counter value and discrimination value. The non-encrypted portion is comprised of the CRC bits, VLOW bits, the function bits and the 28/32-bit serial number. The encrypted and non-encrypted sections combined increase the number of combinations to 1.47×10^{20}.

4.2 Code Word Organization

The HCS360 transmits a 67-bit code word when a button is pressed. The 67-bit word is constructed from a Fixed Code portion and an Encrypted Code portion (Figure 4-3).

The **Encrypted Data** is generated from 4 function bits, 2 user bits, overflow bit, independent mode bit, and 8 serial number bits, and the 16-bit synchronization value (Figure 8-4).

The **Non-encrypted Code Data** is made up of a VLOW bit, 2 CRC bits, 4 function bits, and the 28-bit serial number. If the extended serial number (32 bits) is selected, the 4 function code bits will not be transmitted.

 © 1996 Microchip Technology Inc.

FIGURE 4-1: TRANSMISSION FORMAT—MANCH = 0

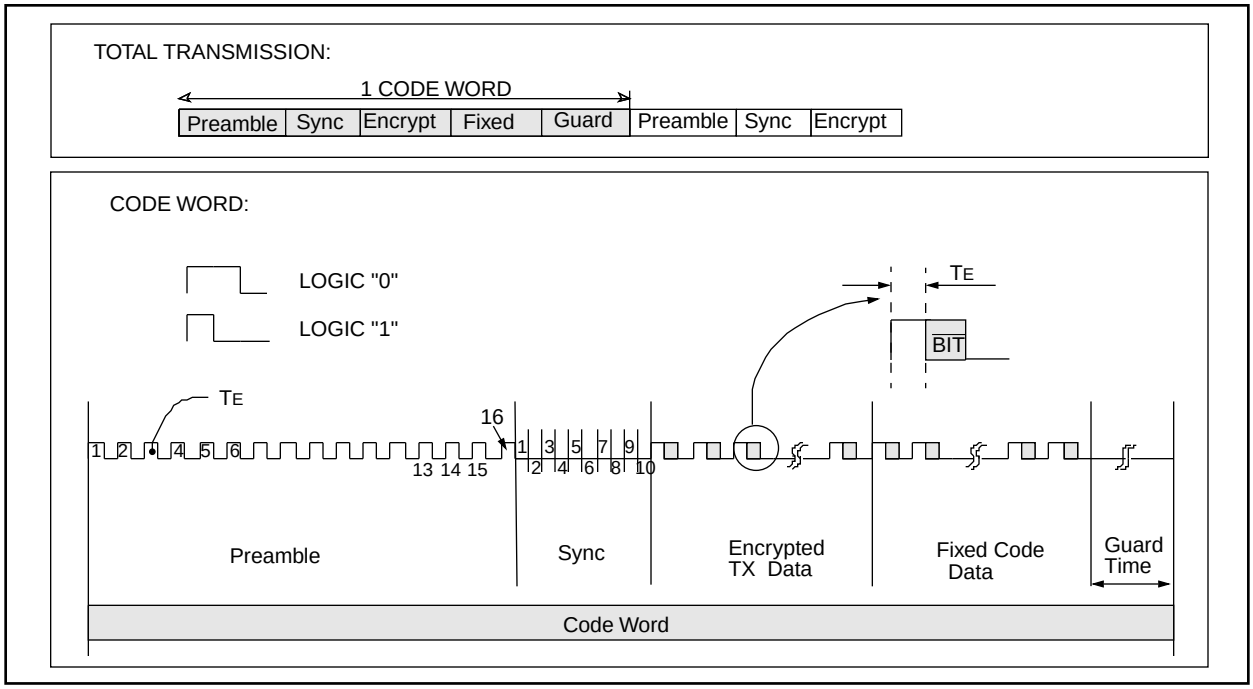

FIGURE 4-2: TRANSMISSION FORMAT—MANCH = 1

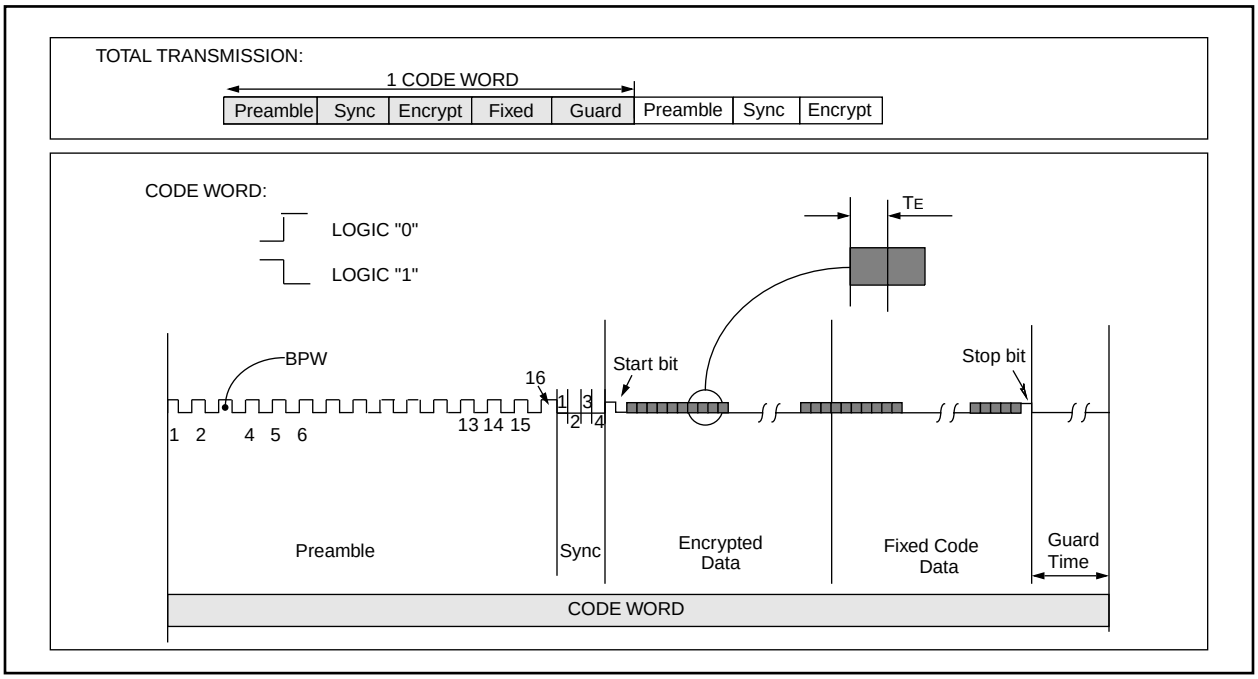

FIGURE 4-3: CODE WORD ORGANIZATION (RIGHT-MOST BIT IS CLOCKED OUT FIRST)

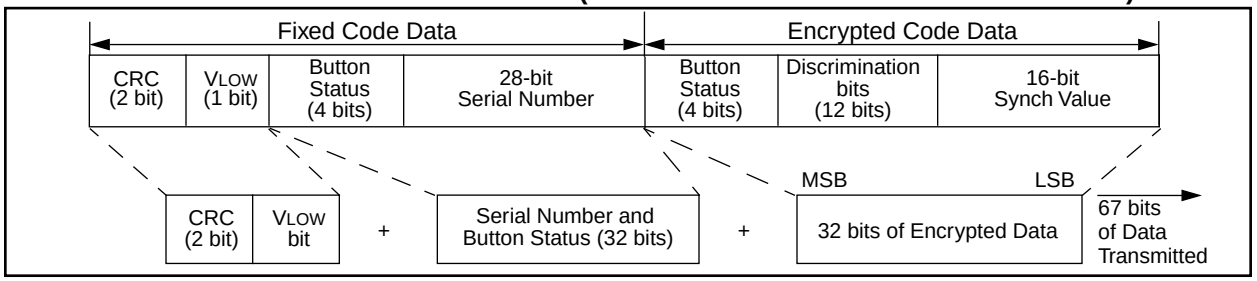

5.0 SPECIAL FEATURES

5.1 Code Word Completion

Code word completion is an automatic feature that ensures that the entire code word is transmitted, even if the button is released before the transmission is complete and that a minimum of two words are completed. The HCS360 encoder powers itself up when a button is pushed and powers itself down after two complete words are transmitted if the user has already released the button. If the button is held down beyond the time for one transmission, then multiple transmissions will result. If another button is activated during a transmission, the active transmission will be aborted and the new code will be generated using the new button information.

5.2 Long Guard Time

Federal Communications Commission (FCC) part 15 rules specify the limits on fundamental power and harmonics that can be transmitted. Power is calculated on the worst case average power transmitted in a 100ms window. It is therefore advantageous to minimize the duty cycle of the transmitted word. This can be achieved by minimizing the duty cycle of the individual bits and by extending the guard time between transmissions. long guard time (LNGRD) is used for reducing the average power of a transmission. This is a selectable feature. Using the LNGRD allows the user to transmit a higher amplitude transmission if the transmission time per 100 ms is shorter. The FCC puts constraints on the average power that can be transmitted by a device, and LNGRD effectively prevents continuous transmission by only allowing the transmission of every second word. This reduces the average power transmitted and hence, assists in FCC approval of a transmitter device.

5.3 CRC (Cycle Redundancy Check) Bits

The CRC bits are calculated on the 65 previously transmitted bits. The CRC bits can be used by the receiver to check the data integrity before processing starts. The CRC can detect all single bit and 66% of double bit errors. The CRC is computed as follows:

EQUATION 5-1: CRC CALCULATION

$$CRC[1]_{n+1} = CRC[0]_n \wedge Di_n$$

and

$$CRC[0]_{n+1} = (CRC[0]_n \wedge Di_n) \wedge CRC[1]_n$$

with

$$CRC[1,0]_0 = 0$$

and

Di_n the nth transmission bit $0 \le n \le 64$

5.4 Secure Learning

In order to increase the level of security in a system, it is possible for the receiver to implement what is known as a secure learning function. This can be done by utilizing the seed value on the HCS360 which is stored in EEPROM. Instead of the normal key generation method being used to create the encryption key, this seed value is used and there should not be any mathematical relationship between serial numbers and seeds for the best security.

5.5 Auto-shutoff

The Auto-shutoff function automatically stops the device from transmitting if a button inadvertently gets pressed for a long period of time. This will prevent the device from draining the battery if a button gets pressed while the transmitter is in a pocket or purse. This function can be enabled or disabled and is selected by setting or clearing the time-out bit (Section 3.5.5). Setting this bit will enable the function (turn Auto-shutoff function on) and clearing the bit will disable the function. Time-out period is approximately 25 seconds.

5.6 VLOW: Voltage LOW Indicator

The VLOW bit is transmitted with every transmission (Figure 4-2) and will be transmitted as a one if the operating voltage has dropped below the low voltage trip point, approximately 3.8V at 25°C. This VLOW signal is transmitted so the receiver can give an indication to the user that the transmitter battery is low.

5.7 $\overline{\text{LED}}$ Output Operation

During normal transmission the $\overline{\text{LED}}$ output is LOW. If the supply voltage drops below the low voltage trip point, the $\overline{\text{LED}}$ output will be toggled at approximately 1Hz during the transmission.

 © 1996 Microchip Technology Inc.

6.0 PROGRAMMING THE HCS360

When using the HCS360 in a system, the user will have to program some parameters into the device including the serial number and the secret key before it can be used. The programming allows the user to input all 192 bits in a serial data stream, which are then stored internally in EEPROM. Programming will be initiated by forcing the PWM line high, after the S3 line has been held high for the appropriate length of time. S0 and S1 should be held low during the entire program cycle (Table 6-1 and Figure 6-1). The device can then be programmed by clocking in 16 bits at a time, followed by the word's complement using S3 or S2 as the clock line and PWM as the data in line. After each 16-bit word is loaded, a programming delay is required for the internal program cycle to complete. The acknowledge can read back after the programming delay (TWC). After the first word and its complement have been downloaded, an automatic bulk write is performed. This delay can take up to Twc. At the end of the programming cycle, the device can be verified (Figure 6-2) by reading back the EEPROM. Reading is done by clocking the S3 line and reading the data bits on PWM. For security reasons, it is not possible to execute a verify function without first programming the EEPROM. **A verify operation can only be done once, immediately following the program cycle**.

FIGURE 6-1: PROGRAMMING WAVEFORMS

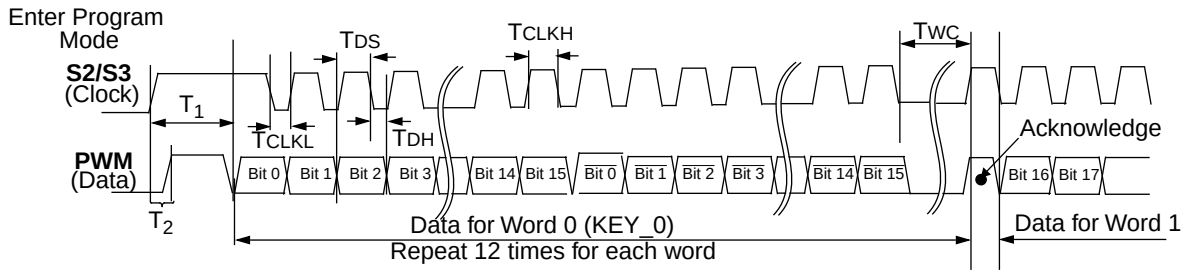

Note 1: Unused button inputs to be held to ground during the entire programming sequence.

2: The VDD pin must be taken to ground after a program/verify cycle.

FIGURE 6-2: VERIFY WAVEFORMS

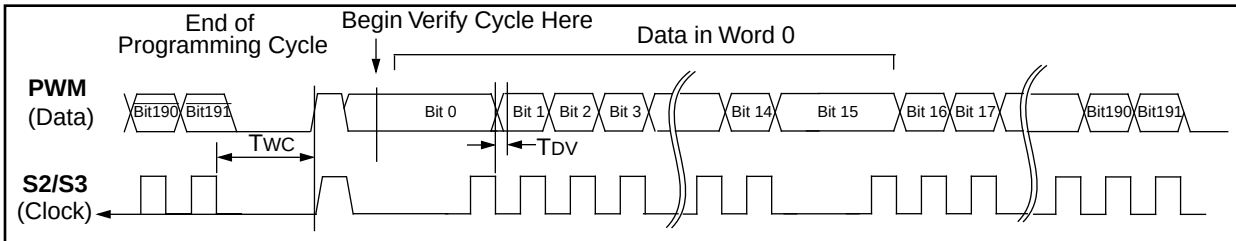

Note: If a Verify operation is to be done, then it must immediately follow the Program cycle.

TABLE 6-1 PROGRAMMING/VERIFY TIMING REQUIREMENTS

VDD = 5.0V ± 10% 25° C ± 5 °C				
Parameter	**Symbol**	**Min.**	**Max.**	**Units**
Program mode setup time	T_2	0	4.0	ms
Hold time 1	T_1	9.0	—	ms
Program cycle time	TWC	—	30	ms
Clock low time	TCLKL	25	—	µs
Clock high time	TCLKH	25	—	µs
Data setup time	TDS	0	—	µs
Data hold time	TDH	18	—	µs
Data out valid time	TDV	—	24	µs

7.0 INTEGRATING THE HCS360 INTO A SYSTEM

Use of the HCS360 in a system requires a compatible decoder. This decoder is typically a microcontroller with compatible firmware. Firmware routines that accept transmissions from the HCS360 and decrypt the hopping code portion of the data stream are available. These routines provide system designers the means to develop their own decoding system.

7.1 Learning a Transmitter to a Receiver

In order for a transmitter to be used with a decoder, the transmitter must first be 'learned'. Several learning strategies can be followed in the decoder implementation. When a transmitter is learned to a decoder, it is suggested that the decoder stores the serial number and current synchronization value in EEPROM. The decoder must keep track of these values for every transmitter that is learned (Figure 7-1). The maximum number of transmitters that can be learned is only a function of how much EEPROM memory storage is available. The decoder must also store the manufacturer's code in order to learn a transmission transmitter, although this value will not change in a typical system so it is usually stored as part of the microcontroller ROM code. Storing the manufacturer's code as part of the ROM code is also better for security reasons.

It must be stated that some learning strategies have been patented and care must be taken not to infringe.

FIGURE 7-1: TYPICAL LEARN SEQUENCE

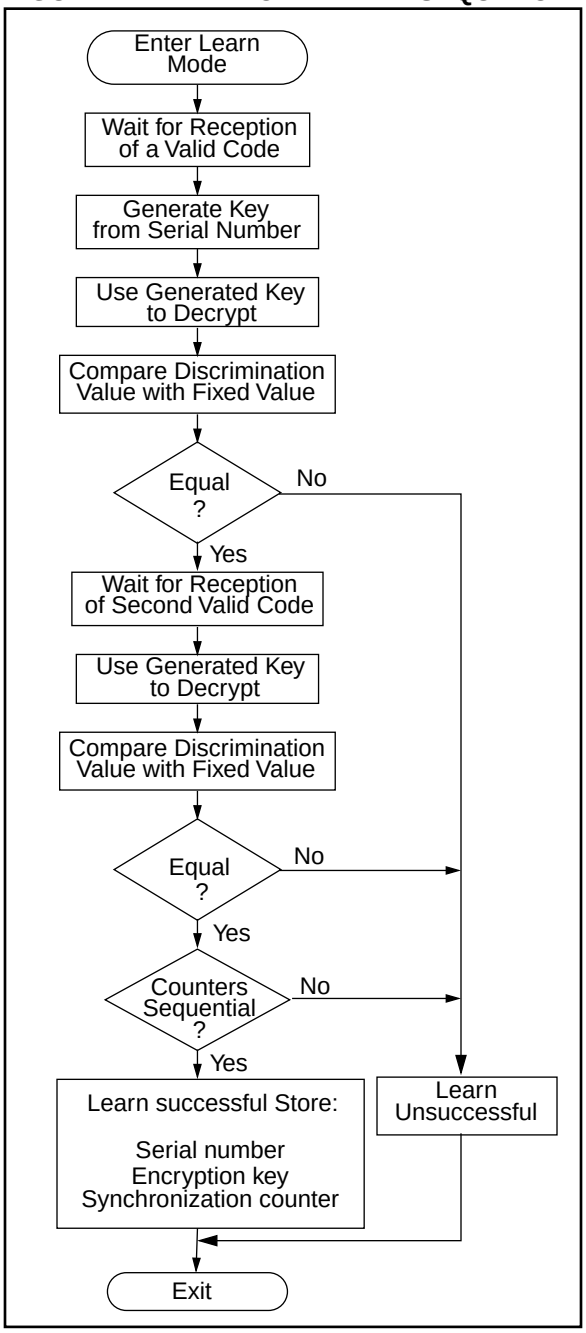

 © 1996 Microchip Technology Inc.

7.2 Decoder Operation

In a typical decoder operation (Figure 7-2), the key generation on the decoder side is done by taking the serial number from a transmission and combining that with the manufacturer's code to create the same secret key that was used by the transmitter. Once the secret key is obtained, the rest of the transmission can be decrypted. The decoder waits for a transmission and immediately can check the serial number to determine if it is a learned transmitter. If it is, it takes the encrypted portion of the transmission and decrypts it using the stored key It uses the discrimination bits to determine if the decryption was valid. If everything up to this point is valid, the synchronization value is evaluated.

FIGURE 7-2: TYPICAL DECODER OPERATION

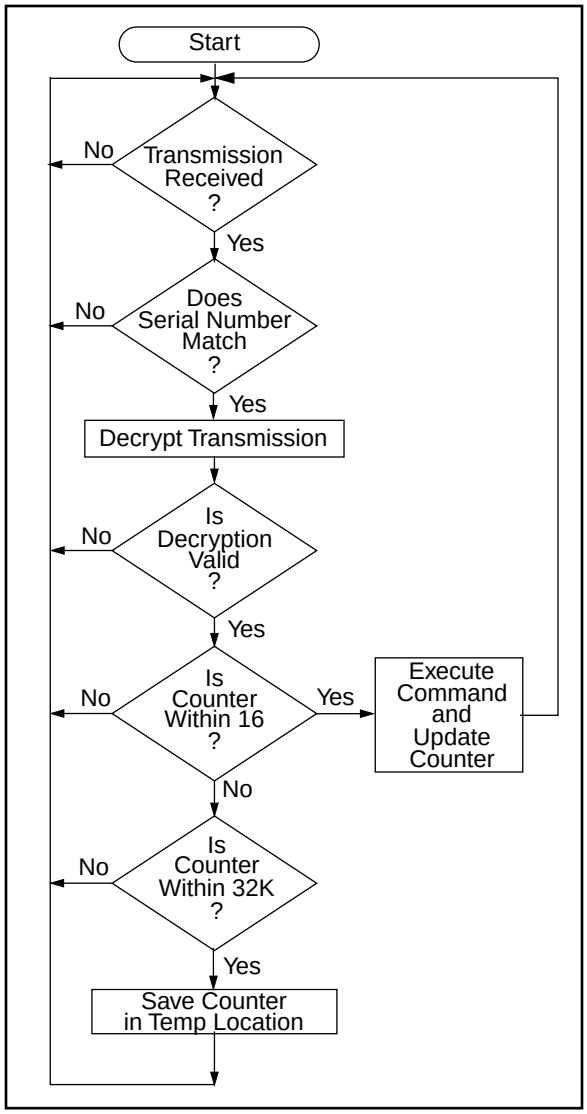

7.3 Synchronization with Decoder

The KEELOQ technology features a sophisticated synchronization technique (Figure 7-3) which does not require the calculation and storage of future codes. If the stored counter value for that particular transmitter and the counter value that was just decrypted are within a formatted window of say 16, the counter is stored and the command is executed. If the counter value was not within the single operation window, but is within the double operation window of say 32K window, the transmitted synchronization value is stored in temporary location and it goes back to waiting for another transmission. When the next valid transmission is received, it will check the new value with the one in temporary storage. If the two values are sequential, it is assumed that the counter had just gotten out of the single operation 'window', but is now back in sync, so the new synchronization value is stored and the command executed. If a transmitter has somehow gotten out of the double operation window, the transmitter will not work and must be relearned. Since the entire window rotates after each valid transmission, codes that have been used are part of the 'blocked' (32K) codes and are no longer valid. This eliminates the possibility of grabbing a previous code and retransmitting to gain entry.

Note:	The synchronization method described in this section is only a typical implementation and because it is usually implemented in firmware, it can be altered to fit the needs of a particular system

FIGURE 7-3: SYNCHRONIZATION WINDOW

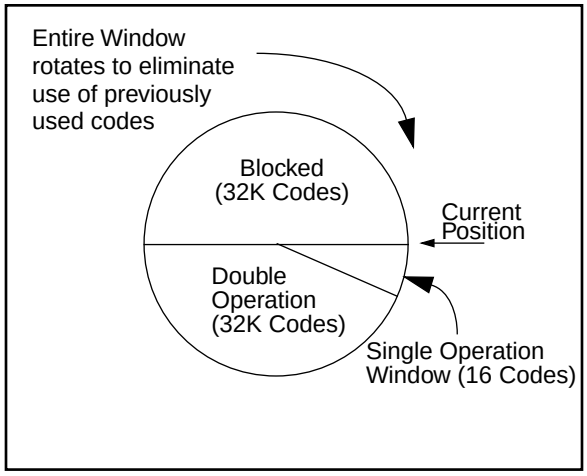

8.0 ELECTRICAL CHARACTERISTICS

TABLE 8-1 ABSOLUTE MAXIMUM RATINGS

Symbol	Item	Rating	Units
V_{DD}	Supply voltage	-0.3 to 6.9	V
V_{IN}	Input voltage	-0.3 to V_{DD} + 0.3	V
V_{OUT}	Output voltage	-0.3 to V_{DD} + 0.3	V
I_{OUT}	Max output current	25	mA
T_{STG}	Storage temperature	-55 to +125	°C (Note)
T_{LSOL}	Lead soldering temp	300	°C (Note)
V_{ESD}	ESD rating	4000	V

Note: Stresses above those listed under “ABSOLUTE MAXIMUM RATINGS” may cause permanent damage to the device.

TABLE 8-2 DC CHARACTERISTICS

Commercial (C): Tamb = 0°C to +70°C
Industrial (I): Tamb = -40°C to +85°C

		2.0V < V_{DD} < 3.3			3.0 < V_{DD} < 6.6				
Parameter	**Sym.**	**Min**	**Typ [1]**	**Max**	**Min**	**Typ [1]**	**Max**	**Unit**	**Conditions**
Operating current (avg)	I_{CC}		0.3	1.2		0.7	1.6	mA	V_{DD} = 3.3V V_{DD} = 6.6V
Standby current	I_{CCS}		0.1	1.0		0.1	1.0	µA	
Auto-shutoff current[2,3]	I_{CCS}		40	75		160	350	µA	
High level Input voltage	V_{IH}	0.55V_{DD}		V_{DD}+0.3	0.55V_{DD}		V_{DD}+0.3	V	
Low level input voltage	V_{IL}	-0.3		0.15V_{DD}	-0.3		0.15V_{DD}	V	
High level output voltage	V_{OH}	0.7V_{DD}			0.7V_{DD}			V	I_{OH} = -1.0mA, V_{DD} = 2.0V I_{OH} = -2.0mA, V_{DD} = 6.6V
Low level output voltage	V_{OL}			0.08V_{DD}			0.08V_{DD}	V	I_{OL} = 1.0mA, V_{DD} = 2.0V I_{OL} = 2.0mA, V_{DD} = 6.6V
$\overline{LED}$ sink current	I_{LED}	0.15	1.0	4.0	0.15	1.0	4.0	mA	V_{LED} = 1.5V, V_{DD} = 6.6V
Resistance; S0-S3	R_{S0-3}	40	60	80	40	60	80	kΩ	V_{DD}=4.0V
Resistance; PWM	R_{PWM}	80	120	160	80	120	160	kΩ	V_{DD}=4.0V

Note 1: Typical values are at 25°C.
2: Auto-shutoff current specification does not include the current through the input pulldown resistors.
3: Auto-shutoff current is periodically sampled and not 100% tested.

 © 1996 Microchip Technology Inc.

FIGURE 8-1: POWER UP AND TRANSMIT TIMING

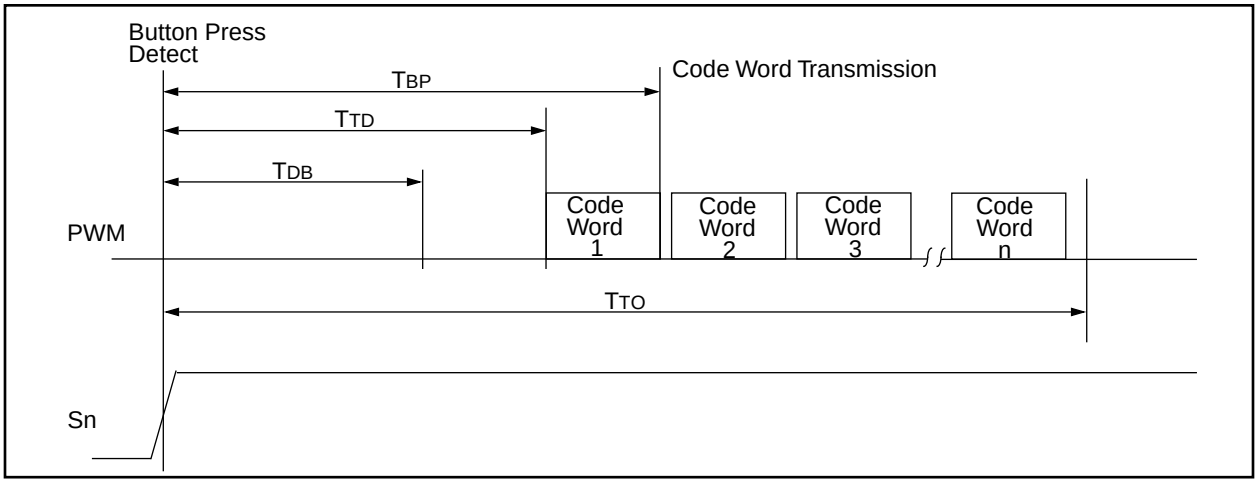

TABLE 8-3 POWER UP AND TRANSMIT TIMING REQUIREMENTS

V_{DD} = +2.0 to 6.6V Commercial (C): Tamb = 0°C to +70°C Industrial (I): Tamb = -40°C to +85°C					
Parameter	**Symbol**	**Min**	**Max**	**Unit**	**Remarks**
Time to second button press	TBP	10 + Code Word Time	26 + Code Word Time	ms	(Note 1)
Transmit delay from button detect	TTD	4.5	26	ms	(Note 2)
Debounce delay	TDB	4.0	13	ms	
Auto-shutoff time-out period	TTO	15.0	35	s	(Note 3)

Note 1: TBP is the time in which a second button can be pressed without completion of the first code word and the intention was to press the combination of buttons.

2: Transmit delay maximum value if the previous transmission was successfully transmitted.

3: The auto shutoff timeout period is not tested.

FIGURE 8-2: PWM FORMAT (MANCH = 0)

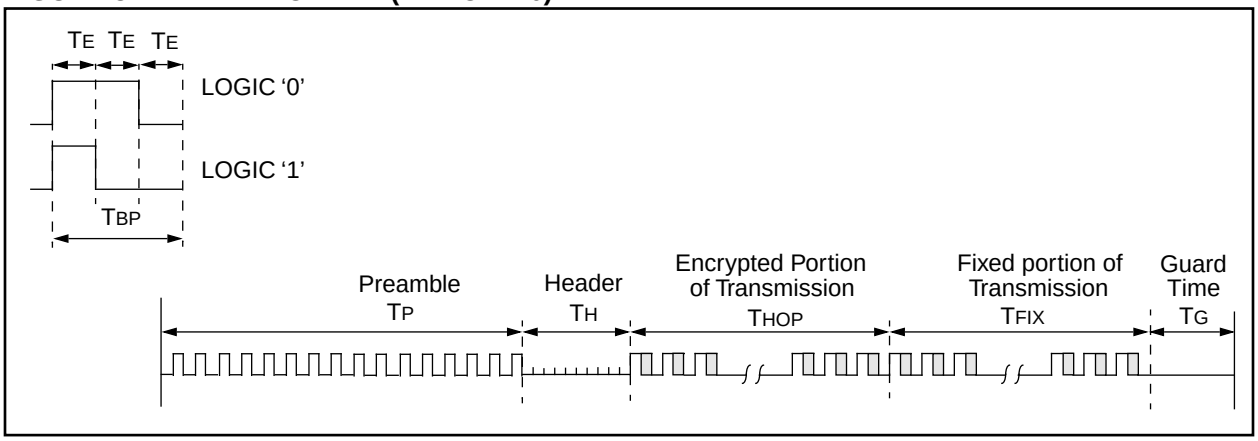

FIGURE 8-3: PWM PREAMBLE/HEADER FORMAT

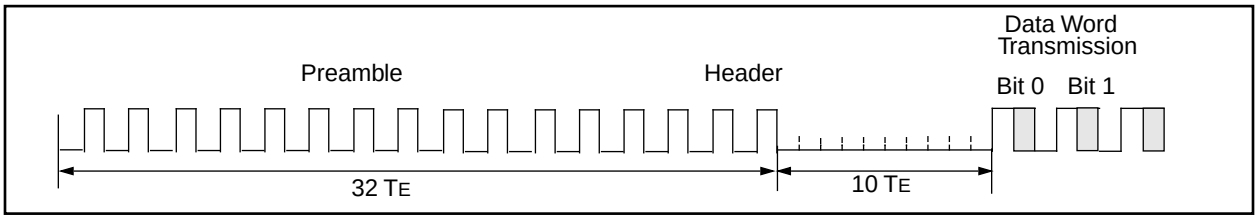

FIGURE 8-4: PWM DATA WORD FORMAT

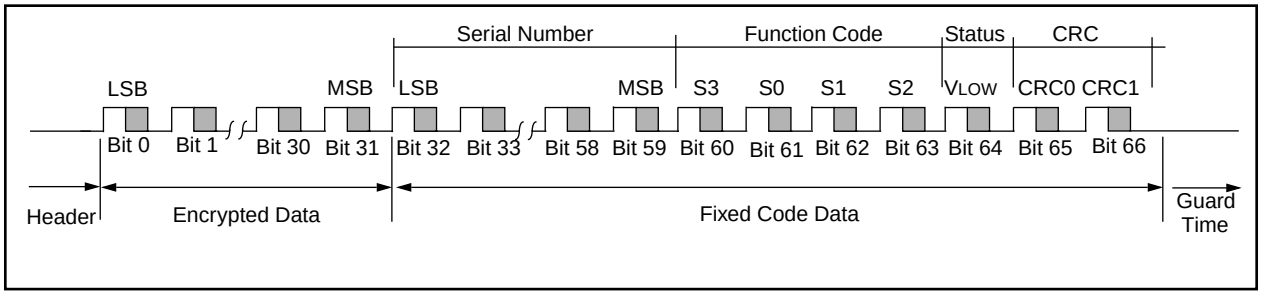

FIGURE 8-5: MANCHESTER FORMAT (MANCH = 1)

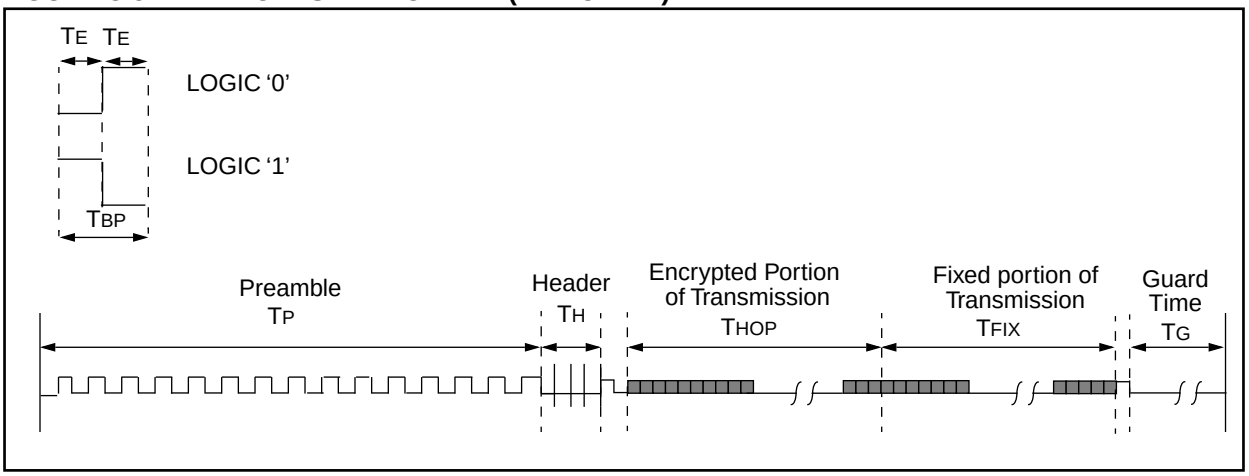

FIGURE 8-6: MANCHESTER PREAMBLE/HEADER FORMAT

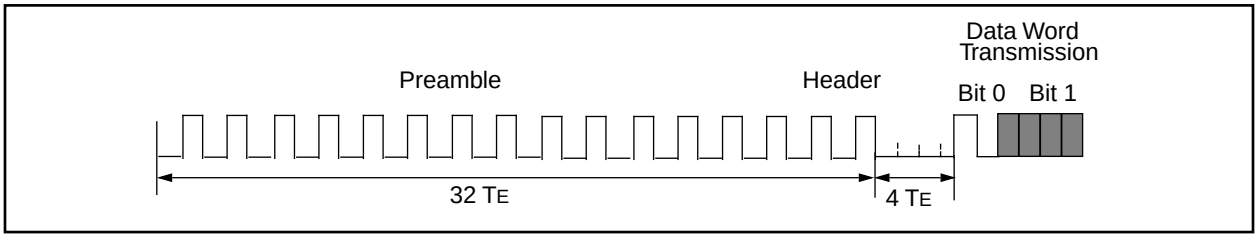

FIGURE 8-7: HCS360 NORMALIZED TE VS. TEMP

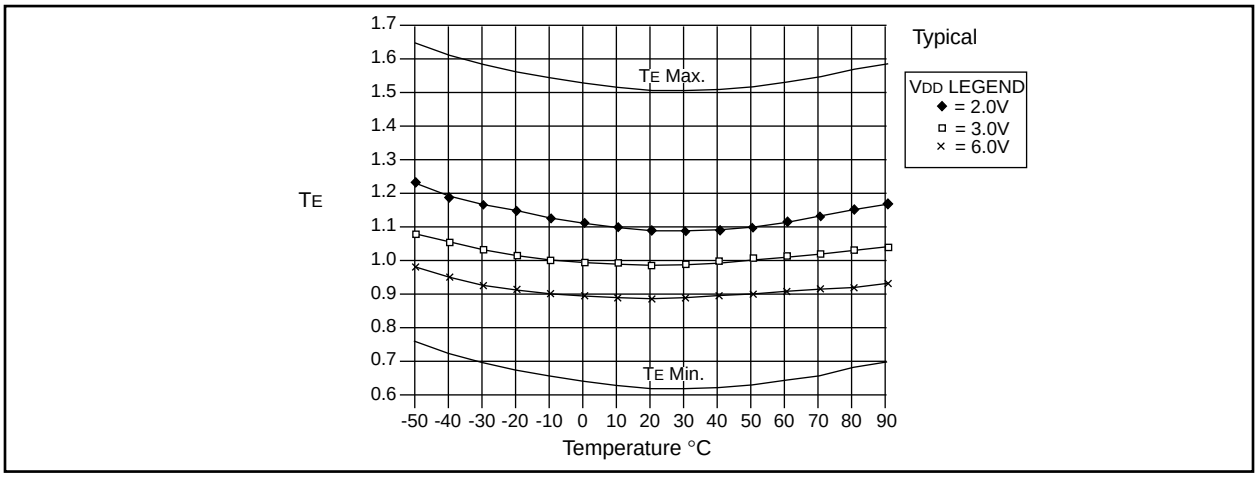

 © 1996 Microchip Technology Inc.

TABLE 8-4 CODE WORD TRANSMISSION TIMING PARAMETERS—PWM MODE

V_{DD} = +2.0V to 6.6V Commercial (C):Tamb = 0°C to +70°C Industrial (I):Tamb = -40°C to +85°C			Code Words Transmitted							
			FAST1 = 0, FAST0 = 0				FAST1 = 0, FAST0 = 1			
Symbol	**Characteristic**	**Number of T_E**	**Min.**	**Typ.**	**Max.**	**Number of T_E**	**Min.**	**Typ.**	**Max.**	**Units**
T_E	Basic pulse element	1	260	400	620	1	130	200	310	µs
T_{BP}	PWM bit pulse width	3	780	1200	1860	3	390	600	930	µs
T_P	Preamble duration	32	8.3	12.8	19.8	32	4.2	6.4	9.9	ms
T_H	Header duration	10	2.6	4.0	6.2	10	1.3	2.0	3.1	ms
T_{HOP}	Hopping code duration	96	25.0	38.4	59.5	96	12.5	19.2	29.8	ms
T_{FIX}	Fixed code duration	105	27.3	42.0	65.1	105	13.7	21.0	32.6	ms
T_G	Guard Time (LNGRD = 0)	16	4.2	6.4	9.9	32	4.2	6.4	9.9	ms
—	Total transmit time	259	67.3	103.6	160.6	275	35.8	55.0	85.3	ms
—	PWM data rate	—	1282	833	538	—	2564	1667	1075	bps

Note: The timing parameters are not tested but derived from the oscillator clock.

V_{DD} = +2.0V to 6.6V Commercial (C):Tamb = 0°C to +70°C Industrial (I):Tamb = -40°C to +85°C			Code Words Transmitted							
			FAST1 = 1, FAST0 = 0				FAST1 = 1, FAST0 = 1			
Symbol	**Characteristic**	**Number of T_E**	**Min.**	**Typ.**	**Max.**	**Number of Te**	**Min.**	**Typ.**	**Max.**	**Units**
T_E	Basic pulse element	1	130	200	310	1	65	100	155	µs
T_{BP}	PWM bit pulse width	3	390	600	930	3	195	300	465	µs
T_P	Preamble duration	32	4.2	6.4	9.9	32	2.1	3.2	5.0	ms
T_H	Header duration	10	1.3	2.0	3.1	10	0.7	1.0	1.6	ms
T_{HOP}	Hopping code duration	96	12.5	19.2	29.8	96	6.2	9.6	14.9	ms
T_{FIX}	Fixed code duration	105	13.7	21.0	32.6	105	6.8	10.5	16.3	ms
T_G	Guard Time (LNGRD = 0)	32	4.2	6.4	9.9	64	4.2	6.4	9.9	ms
—	Total transmit time	275	35.8	55.0	85.3	307	20.0	30.7	47.6	ms
—	PWM data rate	—	2564	1667	1075	—	5128	3333	2151	bps

Note: The timing parameters are not tested but derived from the oscillator clock.

TABLE 8-5 CODE WORD TRANSMISSION TIMING PARAMETERS—MANCHESTER MODE

V_{DD} = +2.0V to 6.6V Commercial (C):Tamb = 0°C to +70°C Industrial (I):Tamb = -40°C to +85°C			Code Words Transmitted							
			FAST1 = 0, FAST0 = 0				FAST1 = 0, FAST0 = 1			
Symbol	**Characteristic**	**Number of T_E**	**Min.**	**Typ.**	**Max.**	**Number of Te**	**Min.**	**Typ.**	**Max.**	**Units**
T_E	Basic pulse element	1	520	800	1240	1	260	400	620	µs
T_P	Preamble duration	32	16.6	25.6	39.7	32	8.3	12.8	19.8	ms
T_H	Header duration	4	2.1	3.2	5.0	4	1.0	1.6	2.5	ms
T_{START}	Start bit	2	1.0	1.6	2.5	2	0.5	0.8	1.2	ms
T_{HOP}	Hopping code duration	64	33.3	51.2	79.4	64	16.6	25.6	39.7	ms
T_{FIX}	Fixed code duration	70	36.4	56.0	86.8	70	18.2	28.0	43.4	ms
T_{STOP}	Stop bit	2	1.0	1.6	2.5	2	0.5	0.8	1.2	ms
T_G	Guard Time (LNGRD = 0)	8	4.2	6.4	9.9	16	4.2	6.4	9.9	ms
—	Total transmit time	182	94.6	145.6	223.7	196	50.76	78.4	121.5	ms
—	Manchester data rate	—	1923	1250	806	—	3846.2	2500	1612.9	bps

Note: The timing parameters are not tested but derived from the oscillator clock.

V_{DD} = +2.0V to 6.6V Commercial (C):Tamb = 0°C to +70°C Industrial (I):Tamb = -40°C to +85°C			Code Words Transmitted							
			FAST1 = 1, FAST0 = 0				FAST1 = 1. FAST0 = 1			
Symbol	**Characteristic**	**Number of T_E**	**Min.**	**Typ.**	**Max.**	**Number of Te**	**Min.**	**Typ.**	**Max.**	**Units**
T_E	Basic pulse element	1	260	400	620	1	130	200	310	µs
T_P	Preamble duration	32	8.3	12.8	19.8	32	4.2	6.4	9.9	ms
T_H	Header duration	4	1.0	1.6	2.5	4	0.5	0.8	1.2	ms
T_{START}	Start bit	2	0.5	0.8	1.2	2	0.3	0.4	0.6	ms
T_{HOP}	Hopping code duration	64	16.6	25.6	39.7	64	8.3	12.8	19.8	ms
T_{FIX}	Fixed code duration	70	18.2	28.0	43.4	70	9.1	14.0	21.7	ms
T_{STOP}	Stop bit	2	0.5	0.8	1.2	2	0.3	0.4	0.6	ms
T_G	Guard Time (LNGRD = 0)	16	4.2	6.4	9.9	32	4.2	6.4	9.9	ms
—	Total transmit time	196	50.96	78.4	121.5	212	27.6	42.4	65.7	ms
—	Manchester data rate	—	3846.2	2500.0	1612.9	—	7692.3	5000.0	3225.8	bps

Note: The timing parameters are not tested but derived from the oscillator clock.

 © 1996 Microchip Technology Inc.

NOTES:

NOTES:

 © 1996 Microchip Technology Inc.

HCS360 PRODUCT IDENTIFICATION SYSTEM

To order or obtain information, e.g., on pricing or delivery, refer to the factory or the listed sales office.

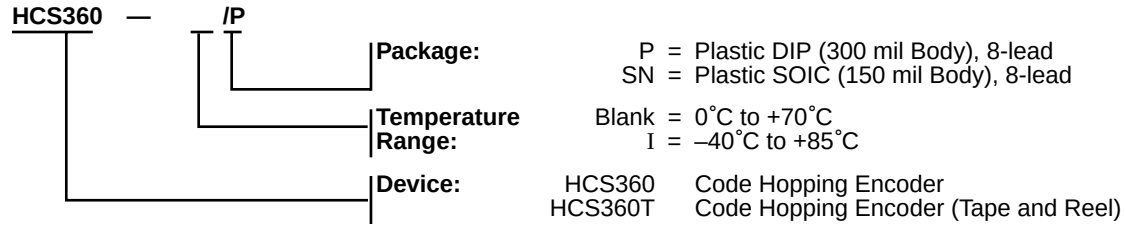

Sales and Support

Data Sheets

Products supported by a preliminary Data Sheet may have an errata sheet describing minor operational differences and recommended workarounds. To determine if an errata sheet exists for a particular device, please contact one of the following:

1. Your local Microchip sales office (see last page)
2. The Microchip Corporate Literature Center U.S. FAX: (602) 786-7277
3. The Microchip's Bulletin Board, via your local CompuServe number (CompuServe membership NOT required).

Please specify which device, revision of silicon and Data Sheet (include Literature #) you are using.

WORLDWIDE SALES & SERVICE

AMERICAS

Corporate Office
Microchip Technology Inc.
2355 West Chandler Blvd.
Chandler, AZ 85224-6199
Tel: 602-786-7200 Fax: 602-786-7277
Technical Support: 602 786-7627
Web: http://www.microchip.com

Atlanta
Microchip Technology Inc.
500 Sugar Mill Road, Suite 200B
Atlanta, GA 30350
Tel: 770-640-0034 Fax: 770-640-0307

Boston
Microchip Technology Inc.
5 Mount Royal Avenue
Marlborough, MA 01752
Tel: 508-480-9990 Fax: 508-480-8575

Chicago
Microchip Technology Inc.
333 Pierce Road, Suite 180
Itasca, IL 60143
Tel: 708-285-0071 Fax: 708-285-0075

Dallas
Microchip Technology Inc.
14651 Dallas Parkway, Suite 816
Dallas, TX 75240-8809
Tel: 972-991-7177 Fax: 972-991-8588

Dayton
Microchip Technology Inc.
Two Prestige Place, Suite 150
Miamisburg, OH 45342
Tel: 937-291-1654 Fax: 937-291-9175

Los Angeles
Microchip Technology Inc.
18201 Von Karman, Suite 1090
Irvine, CA 92612
Tel: 714-263-1888 Fax: 714-263-1338

New York
Microchip Technology Inc.
150 Motor Parkway, Suite 416
Hauppauge, NY 11788
Tel: 516-273-5305 Fax: 516-273-5335

San Jose
Microchip Technology Inc.
2107 North First Street, Suite 590
San Jose, CA 95131
Tel: 408-436-7950 Fax: 408-436-7955

Toronto
Microchip Technology Inc.
5925 Airport Road, Suite 200
Mississauga, Ontario L4V 1W1, Canada
Tel: 905-405-6279 Fax: 905-405-6253

ASIA/PACIFIC

Hong Kong
Microchip Asia Pacific
RM 3801B, Tower Two
Metroplaza
223 Hing Fong Road
Kwai Fong, N.T., Hong Kong
Tel: 852-2-401-1200 Fax: 852-2-401-3431

India
Microchip Technology India
No. 6, Legacy, Convent Road
Bangalore 560 025, India
Tel: 91-80-299-4036 Fax: 91-80-559-9840

Korea
Microchip Technology Korea
168-1, Youngbo Bldg. 3 Floor
Samsung-Dong, Kangnam-Ku
Seoul, Korea
Tel: 82-2-554-7200 Fax: 82-2-558-5934

Shanghai
Microchip Technology
RM 406 Shanghai Golden Bridge Bldg.
2077 Yan'an Road West, Hongiao District
Shanghai, PRC 200335
Tel: 86-21-6275-5700
Fax: 86 21-6275-5060

Singapore
Microchip Technology Taiwan
Singapore Branch
200 Middle Road
#10-03 Prime Centre
Singapore 188980
Tel: 65-334-8870 Fax: 65-334-8850

Taiwan, R.O.C
Microchip Technology Taiwan
10F-1C 207
Tung Hua North Road
Taipei, Taiwan, ROC
Tel: 886 2-717-7175 Fax: 886-2-545-0139

EUROPE

United Kingdom
Arizona Microchip Technology Ltd.
Unit 6, The Courtyard
Meadow Bank, Furlong Road
Bourne End, Buckinghamshire SL8 5AJ
Tel: 44-1628-851077 Fax: 44-1628-850259

France
Arizona Microchip Technology SARL
Zone Industrielle de la Bonde
2 Rue du Buisson aux Fraises
91300 Massy, France
Tel: 33-1-69-53-63-20 Fax: 33-1-69-30-90-79

Germany
Arizona Microchip Technology GmbH
Gustav-Heinemann-Ring 125
D-81739 Müchen, Germany
Tel: 49-89-627-144 0 Fax: 49-89-627-144-44

Italy
Arizona Microchip Technology SRL
Centro Direzionale Colleone
Palazzo Taurus 1 V. Le Colleoni 1
20041 Agrate Brianza
Milan, Italy
Tel: 39-39-6899939 Fax: 39-39-6899883

JAPAN

Microchip Technology Intl. Inc.
Benex S-1 6F
3-18-20, Shin Yokohama
Kohoku-Ku, Yokohama
Kanagawa 222 Japan
Tel: 81-4-5471- 6166 Fax: 81-4-5471-6122

1/14/97

MICROCHIP

All rights reserved. © 1997, Microchip Technology Incorporated, USA. 1/97

Printed on recycled paper.

Information contained in this publication regarding device applications and the like is intended for suggestion only and may be superseded by updates. No representation or warranty is given and no liability is assumed by Microchip Technology Incorporated with respect to the accuracy or use of such information, or infringement of patents or other intellectual property rights arising from such use or otherwise. Use of Microchip's products as critical components in life support systems is not authorized except with express written approval by Microchip. No licenses are conveyed, implicitly or otherwise, under any intellectual property rights. The Microchip logo and name are registered trademarks of Microchip Technology Inc. in the U.S.A. and other countries. All rights reserved. All other trademarks mentioned herein are the property of their respective companies.

This datasheet has been downloaded from:

www.DatasheetCatalog.com

Datasheets for electronic components.

littlediode
COMPONENTS FOR ALL

Littlediode supplies new, hard to find or obsolete electronic components and semiconductors all over the world.

With over two million different components listed you are sure to find the part you need.

Feel free to visit us today at our online store:

LittleDiode.com

Looking forward to providing you with the best possible service.