6001

Zetex Compatible ZXRD1000 Inductor

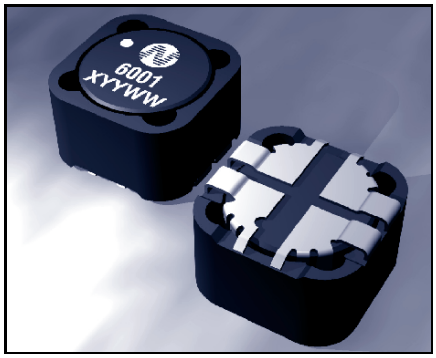

SELECTION GUIDE

	Inductance		DC Resistance		DC Current Continuous[2]	
Order Code	µH 1kHz,100mV Pins 3 & 1	µH 1kHz,100mV Pins 4 & 2	Ω TYP Pins 3 & 1	Ω TYP Pins 4 & 2	A MAX Pins 3 & 1	A MAX Pins 4 & 2
6001	10±25%	10±25%	0.015±25%	0.053±25%	4.0	1.5

ABSOLUTE MAXIMUM RATINGS

Operating free air temperature range	–40°C to 85°C
Storage temperature range	–40°C to 125°C

FEATURES

- Bobbin Format
- Dual Winding
- Surface Mounting
- Integral EMI Shield
- Compact Size
- Tape and Reel Packaging
- Low Profile

DESCRIPTION

The 6001 inductor has been specifically designed for operation with the ZETEX ZXRD1000 PWM DC-DC Controllers or the Simplesync™ high efficiency converters. The dual winding offers a unique synchronous solution for on card conversion.

MECHANICAL DIMENSIONS

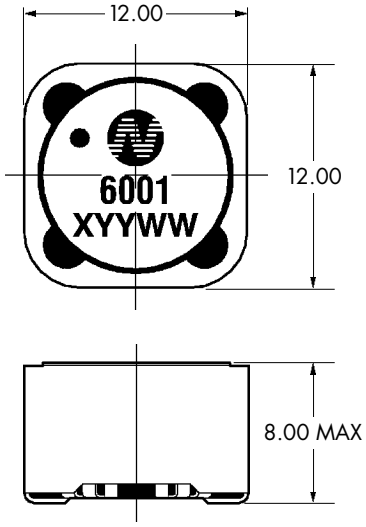

Recommended Footprint Details

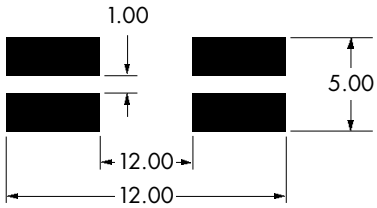

Pin Connections (Top View)

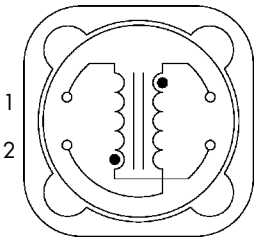

3 & 1 = Main Winding

4 & 2 = Auxilliary Winding

Weight: 4.0g
Unless otherwise stated all dimensions in mm ±0.25mm.
Hatching represents solder pads.

1 Specifications typical at T_A =25°C
2 If current is flowing in both windings the maximum DC current occurs when either the inductance falls to 75% of its nominal value or when its temperature rise reaches 40°C, whichever is sooner.
3 For tape and reel packaging details refer to datasheet NDC AN002.

6001

Zetex Compatible ZXRD1000 Inductor

APPLICATION NOTES

The 6001 inductor enables the basic architecture of a non synchronous converter to be used to generate synchronous operation without the need for complex circuitry and additional cost.

The 6001 generates a drive waveform that is inverted compared to the waveform at the main input to the inductor. This waveform can be used to drive the synchronous switch. The net result gives additional benefits and lowers the overall cost.

4.5V -10V Input, 3.3V/4A Output, N Phase, High Efficiency SimpleSync™ Converter 200kHz

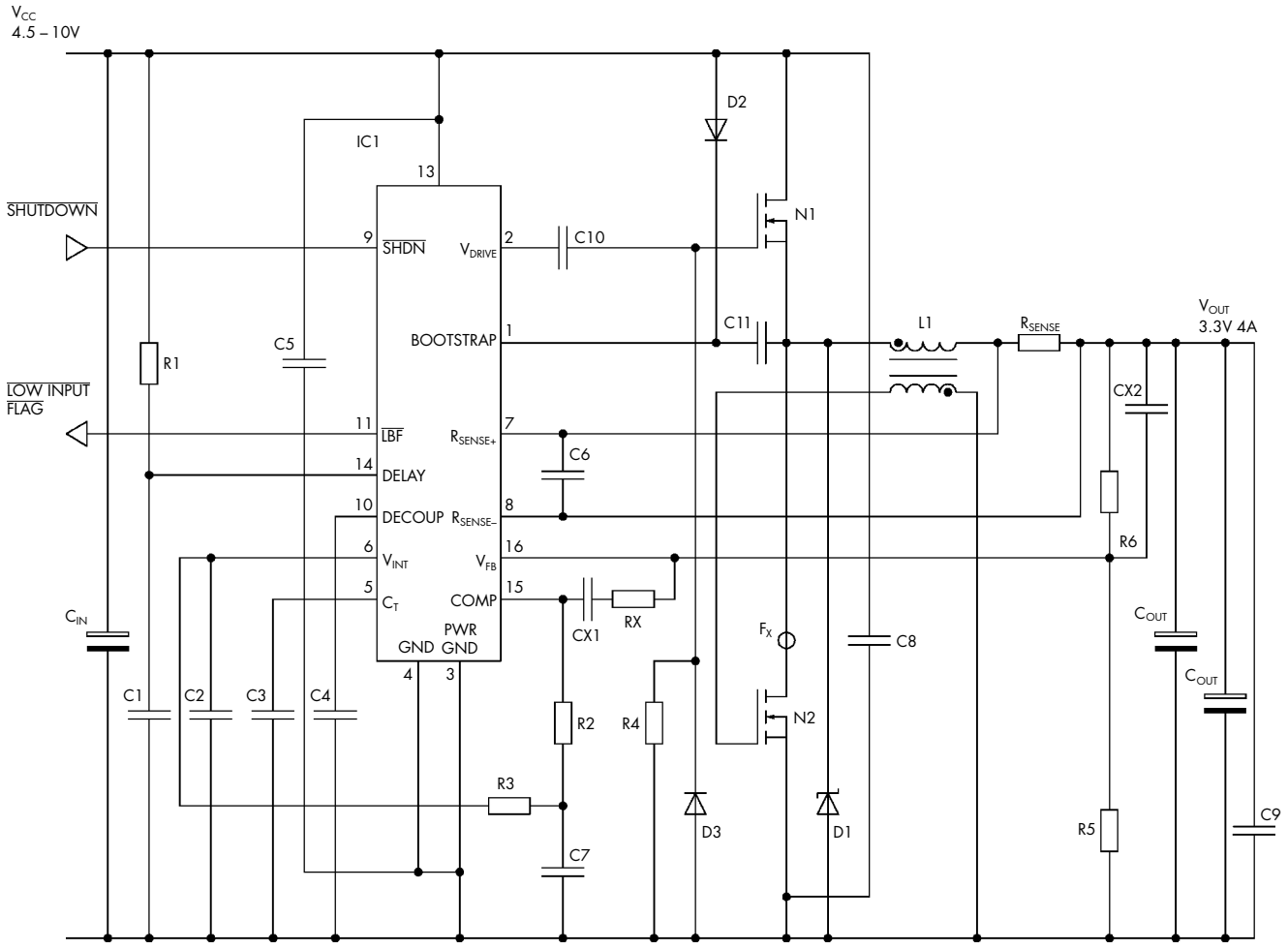

Reference Circuit published by kind permission of ZETEX Plc.

C&D Technologies (NCL) Limited reserve the right to alter or improve the specification, internal design or manufacturing process at any time, without notice. Please check with your supplier or visit our web site to ensure that you have the current and complete specification for your product before use.

© C&D Technologies (NCL) Limited 2000 NMP 6001.2

No part of this publication may be copied, transmitted or stored in a retrieval system or reproduced in any way including, but not limited to, photography, photocopy, magnetic or other recording means, without prior written permission from C&D Technologies (NCL) Limited.

Instructions for use are available from www.dc-dc.com

C&D Technologies (NCL) Ltd
Tanners Drive, Blakelands North
Milton Keynes MK14 5BU, England
Tel: +44 (0)1908 615232
Fax:+44 (0)1908 617545
email: info@cdtechno-ncl.com

C&D Technologies (NCL), Inc.
8917 Glenwood Avenue, Raleigh
NC 27612, USA
Tel: +1 (919) 571-9405
Fax: +1 (919) 571-9262
email: info@us.cdtechno-ncl.com

www: http://www.dc-dc.com

C&D TECHNOLOGIES
Power Solutions

Littlediode supplies new, hard to find or obsolete electronic components and semiconductors all over the world.

With over two million different components listed you are sure to find the part you need.

Feel free to visit us today at our online store:

LittleDiode.com

Looking forward to providing you with the best possible service.