LINEAR SYSTEMS

Linear Integrated Systems

LS3550 SERIES

MONOLITHIC DUAL PNP TRANSISTORS

FEATURES	
6 LEAD SOT-23 SURFACE MOUNT PACKAGE*	
TIGHT MATCHING[1]	2mV
EXCELLENT THERMAL TRACKING[1]	3μV/°C
ABSOLUTE MAXIMUM RATINGS[2] @ 25 °C (unless otherwise stated)	
Maximum Temperatures	
Storage Temperature	-65 to +150 °C
Operating Junction Temperature	-55 to +150 °C
Maximum Power Dissipation	
Continuous Power Dissipation	TBD
Maximum Currents	
Collector Current	50mA
Maximum Voltages	
Collector to Collector Voltage	80V

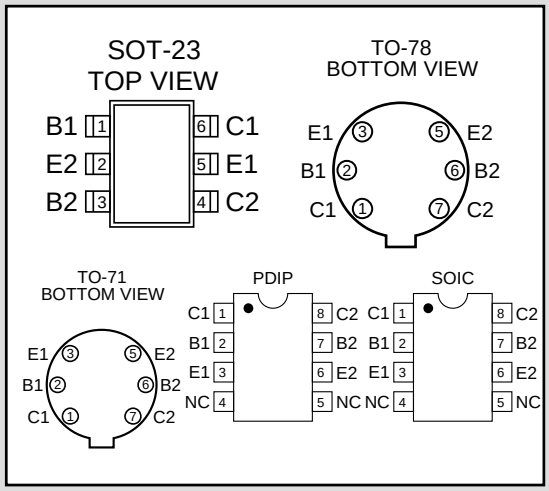

MATCHING ELECTRICAL CHARACTERISTICS @25 °C (unless otherwise stated)

	CHARACTERISTIC	LS3250A						UNIT	CONDITIONS
		MIN	MAX	MIN	MAX	MIN	MAX		
$\lvert V_{BE1} - V_{BE2} \rvert$	Base to Emitter Voltage Differential		2		5		10	mV	I_C = -10mA, V_{CE} = -5V
$\frac{\lvert V_{BE1} - V_{BE2} \rvert}{\Delta T}$	Base to Emitter Voltage Differential Change with Temperature		3		5		15	μV/°C	I_C = -10mA, V_{CE} = -5V T_A = -40°C to +85°C
$\lvert I_{B1} - I_{B2} \rvert$	Base Current Differential		10		10		10	nA	I_C = -10μA, V_{CE} = -5V
$\frac{\lvert I_{B1} - I_{B2} \rvert}{\Delta T}$	Base Current Differential Change with Temperature		0.5		0.5		1.0	nA/°C	I_C = -10μA, V_{CE} = -5V T_A = -40°C to +85°C
h_{FE1}/h_{FE2}	Current Gain Differential		10		10		15	%	I_C = -10μA, V_{CE} = -5V

ELECTRICAL CHARACTERISTICS @25 °C (unless otherwise stated)

SYMBOL	CHARACTERISTIC	LS3250A		LS3250B		LS3250C		UNIT	CONDITIONS
		MIN	MAX	MIN	MAX	MIN	MAX		
BV_{CBO}	Collector to Base Breakdown Voltage	-45		-40		-20		V	I_C = -10mA, I_E = 0A
BV_{CEO}	Collector to Emitter Breakdown Voltage	-45		-40		-20			I_C = -10μA, I_E = 0A
BV_{CCO}	Collector to Collector Breakdown Voltage	-80		-80		-80			
BV_{EBO}	Emitter to Base Breakdown Voltage[3]	-6.2		-6.2		-6.2			I_E = -10μA, I_C = 0A
$V_{CE(SAT)}$	Collector to Emitter Saturation Voltage		-0.25		-0.25		-1.2		I_C = -100mA I_B = -10mA

Linear Integrated Systems • 4042 Clipper Court • Fremont, CA 94538 • Tel: 510 490-9160 • Fax: 510 353-0261

ELECTRICAL CHARACTERISTICS CONT. @25 °C (unless otherwise stated)

SYMBOL	CHARACTERISTIC	LS3250A		LS3250B		LS3250C		UNIT	CONDITIONS
		MIN	MAX	MIN	MAX	MIN	MAX		
h_{FE}	DC Current Gain	150		100		50			I_C = -1mA, V_{CE} = -5V
		120		80		40			I_C = -10mA, V_{CE} = -5V
		100		80		40			I_C = -100mA, V_{CE} = -5V
I_{CBO}	Collector Cutoff Current		-0.2		-0.2			nA	I_E = 0A, V_{CB} = -30V
							-0.2		I_E = 0A, V_{CB} = -20V
I_{EBO}	Emitter Cutoff Current		-0.2		-0.2		-0.2		I_E = 0A, V_{CB} = -3V
I_{C1C2}	Collector to Collector Leakage Current		-1		-1		-1		V_{CC} = ±80V
C_{OBO}	Output Capacitance		2		2		2	pF	I_E = 0A, V_{CB} = -10V
f_T	Gain Bandwidth Product (Current)		600		600		600	MHz	I_C = -1mA, V_{CE} = -5V
NF	Noise Figure (Narrow Band)		3		3		3	dB	I_C = -100µA, V_{CE} = -5V BW = 200Hz R_B = 10Ω, *f* = 1kHz

SOT-23

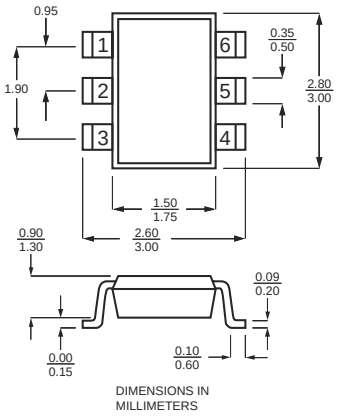

TO-71

Six Lead

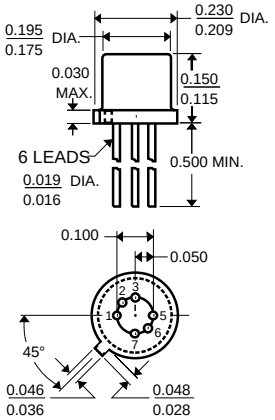

TO-78

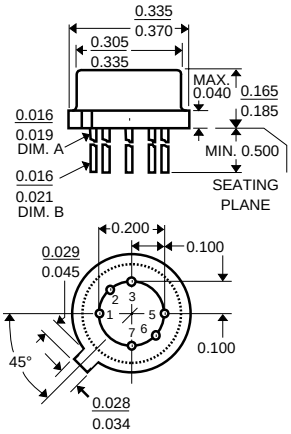

PDIP

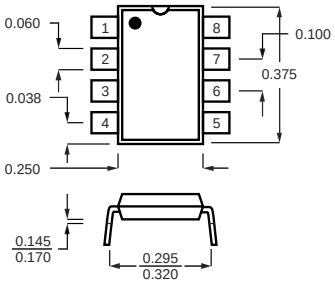

SOIC

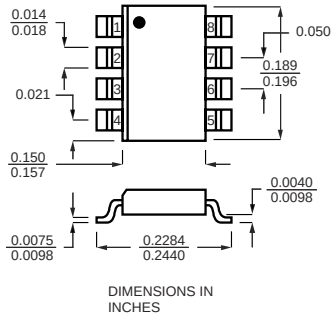

Standard package is SOT23 6 lead.
Other packages listed are optional. Contact factory regarding availability of optional packages.

NOTES:

1. Maximum rating for LS3550A, SOT23-6.
2. Absolute maximum ratings are limiting values above which serviceability may be impaired.
3. The reverse Base to Emitter voltage must never exceed -6.2 Volts. The reverse Base to Emitter current must never exceed -10µA.

Information furnished by Linear Integrated Systems is believed to be accurate and reliable. However, no responsibility is assumed for its use; nor for any infringement of patents or other rights of third parties which may result from its use. No license is granted by implication or otherwise under any patent or patent rights of Linear Integrated Systems.

Linear Integrated Systems • 4042 Clipper Court • Fremont, CA 94538 • Tel: 510 490-9160 • Fax: 510 353-0261

This datasheet has been downloaded from:

www.DatasheetCatalog.com

Datasheets for electronic components.

Littlediode supplies new, hard to find or obsolete electronic components and semiconductors all over the world.

With over two million different components listed you are sure to find the part you need.

Feel free to visit us today at our online store:

LittleDiode.com

Looking forward to providing you with the best possible service.