FX003

QTC Selective Call Tone Decoders

Obsolete Product
- For Information Only -

Publication D/003/4 February 1990

- **15-Tone Selcall Decoder**
- **Group Call and Data Capability**
- **Excellent Noise Performance**
- **4 Bit Data Output**
- **Few External Components**
- **CCIR, ZVEI, EEA, EIA Tone Sets**
- **μ Processor Compatible**
- **High Dynamic Range**
- **Low Power CMOS**
- **On-Chip Oscillator Uses Low-Cost Resonator**

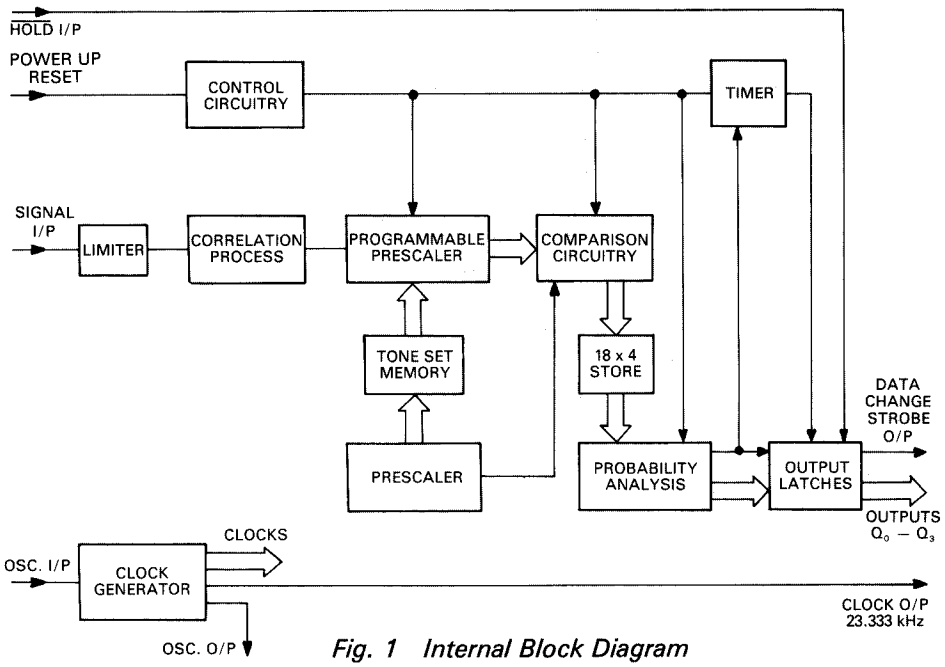

Fig. 1 Internal Block Diagram

FX003QC
FX003QZ
FX003QE
FX003QA
FX003QZS

The FX003 is a CMOS QTC (Quadradecimal Tone Coding) tone decoder which may be used to decode Selcall tones in accordance with CCIR, ZVEI, EEA and EIA international tone standards.
The FX003 detects an input frequency falling within any of the fifteen tone channels programmed on-chip and outputs the hexadecimal tone number in 4-bit binary code. When a tone is detected, its 4-bit code is latched at the data outputs and a Data Change is generated. Failure to qualify any tone for a continuous period of 33 ms causes the output to be set to 'Notone' (16th logic state) and a Data Change strobe to be generated.
A DATA CHANGE output signals each change in the output code and can be used with the HOLD/ACKNOWLEDGE input to establish handshake routines with microprocessors and other data processing logic.
A 'Power Up Reset' (PURS) routine ensures all internal circuitry is correctly reset when power is first applied to the device. Following 'PURS' the FX003 generates HEX 'E' (NO DATA CHANGE) which in turn is followed by a normal decode sequence.
The on-chip inverter may be used with a resonator to provide the 560 kHz master clock for the device, or an external clock may be used. A divided down buffered 23.33 kHz clock output is also provided for use with other '03 devices and trimming of the 560 kHz resonator.
The FX003 is available in a number of pin compatible versions, each version programmed in accordance with the frequencies and bandwidths of a specified QTC toneset.

Pin	Description (See Figure 2)		Function
D.I.L. FX003*	Chip Carrier FX102K (see Note A)	FX202*K	*QC, QZ, QE, QA, QZS
1	2	—	**23.333 kHz Clock O/P:** A 23.333 kHz buffered squarewave logic output directly derived from the oscillator frequency (nominally 560.0 kHz). May be used for auxiliary functions e.g. 560 kHz resonator trimming,external timing of received tone periods and for other '03 family products.
2	4	—	**$\overline{\text{Xtal}}$:** Output from on-chip inverter.
3	6	—	**Xtal/Clock:** Input to on-chip inverter may be used in conjunction with $\overline{\text{Xtal}}$ O/P and 560 kHz resonator or as a buffered input for an external clock (nominally 560.0 kHz).
4	10	5	**VSS:** Negative supply.
5	—	8	**$\overline{\text{Hold}}$ I/P:** Active when at VSS. If hold is taken to VSS when the input tone changes it latches the next data change pulse at logic 1 until the $\overline{\text{Hold}}$ is returned to VDD. This facilitates Interrupt/Handshake routines for microprocessors when used in conjunction with the Data Change O/P. Tie to VDD if not used.
6	—	9	**Power Up Reset:** A logic 1 level of at least 1 ms duration is required at this pin to reset internal circuitry on power-up. For slow-rising power supplies increase the time constant of the components shown accordingly.
7 & 16	1 3 5 7 8 9 11 12 14 15 16 18 20 21 22 23 25 27	1 2 3 6 7 10 11 13 14 15 18 20 23 24 26 28	**Internally Connected/Open Circuit:** Should be left open circuit.
8	—	16	**Data Change:** A pulse is generated at this pin shortly after detection of a tone and new data being presented at the Q_0 — Q_3 outputs *(see Figure 5 Timing Diagram).*
9 10 11 12	—	22	Q_3, Q_2, Q_1, Q_0 — **Data Outputs:** A 4-bit word which is output after a successful decode and represents the Hex code for the decoded tone frequency.
13	19	25	**VDD:** Positive Supply.
14	24	—	**Signal Input:** Audio selcall tones are a.c. coupled to this pin via a capacitor. D.C. bias of the internal high gain limiter is set up by connecting this pin via a resistor to the bias pin.
15	26	—	**Signal Bias:** These pins should not be loaded with any other circuitry.
—	—	3	93.333 kHz Osc I/P — FX102K/FX202*K: Interchip connections. These pins should not be loaded with any external circuitry. FX003*D.I.L: internally connected.
—	13	—	93.333 kHz Osc O/P.
—	—	27	Logic Signal I/P.
—	17	—	Logic Signal O/P

Note A:
*FX102K and FX202*K are sold as a pair, and represent the same circuit function as the FX003* D.I.L. device.*

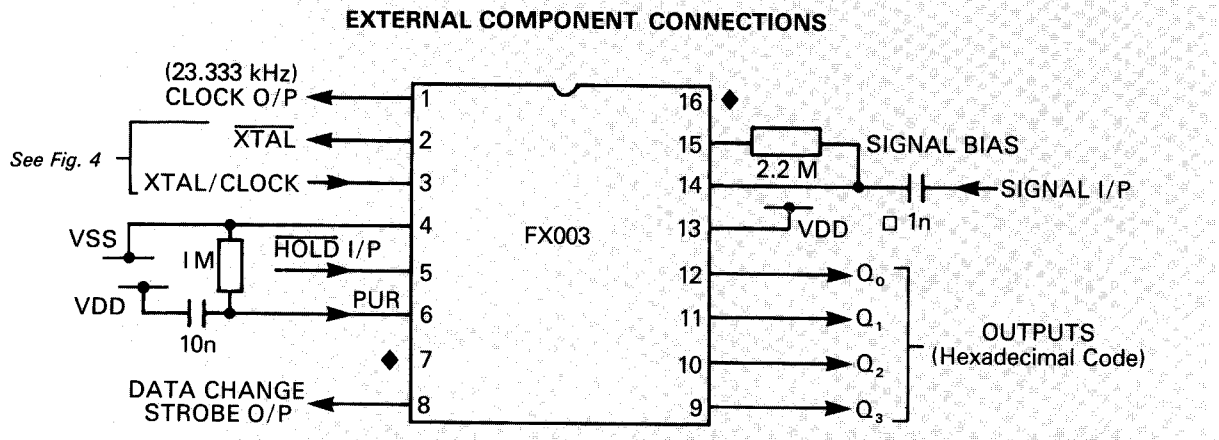

Fig. 2 Dual-In-Line

* *QC, QZ, QE, QA, QZS*
◆ *No connection. Do not tie.*
□ *1n recommended value for C, Z, E and ZS versions.*
2.2n recommended value for the A version.

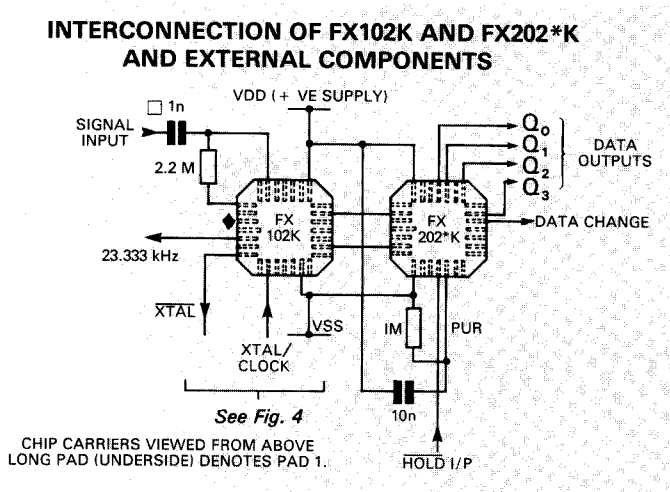

Fig. 3 Chip Carrier

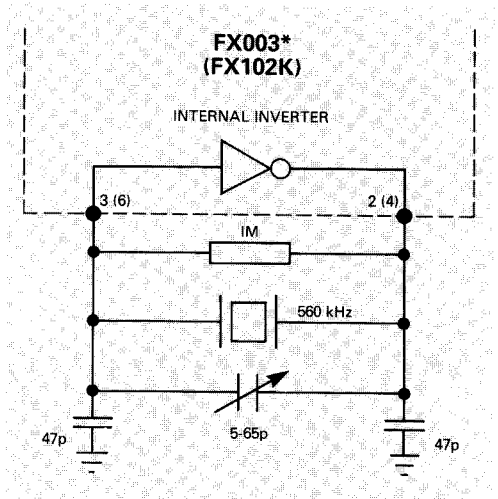

Fig. 4 560 kHz Resonator Circuit

Character Tone Table

Tone Frequencies (f_O) in Hz

003QA (EIA)	003QC (CCIR)	003QE (EEA)	003QZ (ZVEI)	003QZS (ZVEI-S)	Output Code Q_3	Q_2	Q_1	Q_0	QTC Format Character
600	1981	1981	2400	2400	0	0	0	0	0
741	1124	1124	1060	1060	0	0	0	1	1
882	1197	1197	1160	1160	0	0	1	0	2
1023	1275	1275	1270	1270	0	0	1	1	3
1164	1358	1358	1400	1400	0	1	0	0	4
1305	1446	1446	1530	1530	0	1	0	1	5
1446	1540	1540	1670	1670	0	1	1	0	6
1587	1640	1640	1830	1830	0	1	1	1	7
1728	1747	1747	2000	2000	1	0	0	0	8
1869	1860	1860	2200	2200	1	0	0	1	9
2151	2400	1055	2800	886	1	0	1	0	A
2433	930	930	810	810	1	0	1	1	B
2010	2247	2247	970	740	1	1	0	0	C
2292	991	991	886	680	1	1	0	1	D
459	2110	2110	2600	970	1	1	1	0	E
NOTONE	NOTONE	NOTONE	NOTONE	NOTONE	1	1	1	1	F

Specification

Absolute Maximum Ratings

Exceeding the maximum rating can result in device damage. Operation of the device outside the operating limits is not implied.

Supply voltage		−0.3V to 7.0V
Input voltage at any pin (ref VSS = OV)		−0.3V to (VDD + 0.3V)
Output sink/source current (total)		20mA
Operating temperature range:	FX003* FX102K/FX202K*	−30°C to +85°C
Storage temperature:	FX003* FX102K/FX202*	−55°C to 125°C
Maximum device dissipation	*QC, QZ, QE, QA, QZS	100mW

Operating Limits

VDD = 5V, T_A = 25°C, ϕ = 560kHz, $\Delta f\ \phi$ = 0.
All characteristics measured using the standard test circuit with the following test parameters, and is valid for all tones unless otherwise stated:—

Characteristic	See Note	Min	Typ	Max	Unit
Static Characteristics					
Supply voltage (VSS = OV)		3.3	5.0	5.5	V
Supply current			500		μA
Logic '1' output I source = 0.1 mA	1	4.5			V
Logic '0' output I sink = 0.1 mA	1			0.5	V
Logic '1' input Level	2	3.5			V
Logic 'O' input level	2			1.5	V
Dynamic Characteristics					
Signal input range	3	0.1		VDD	Vpk-pk
Decode Bandwidth (P⩾0.995)	4				
QA	4a	20			±Hz
QC	4b	1			±%
QE	4c	1			±%
QZ/QZS	4d	2			±%
Not-decode bandwidth (P⩽0.03)					
QA	5			60	±Hz
QC	5			3	±%
QE	5			3	±%
QZ/QZS	5			4.5	±%
Noise response rate (hours per F→ $\bar{F}$→ F single character response with no input tone). QA	6		0.15		Hour
QC	6		40.0		Hour
QE	6		40.0		Hour
QZ/QZS	6		1.0		Hour
Decode response time:					
Notone to tone (F→ $\bar{F}$)	7	20	25	Tp	ms
Tone to notone, T_f ($\bar{F}$→ F)	7	33		53	ms
Min. intertone gap for 'F'	8	15		28	ms

Notes

1. *Relates to output pins 1, 8, 9-12.*
2. *Relates to input pins 5 and 6.*
3. *A.C. coupled, sine/squarewave.*
4. *With minimum tone period (Tp) specified for toneset. P = decode probability:*
   (a), (c) SNR 3 dB
   (b), (d) SNR 0dB
5. *All conditions of input SNR and amplitude with maximum Tp specified for toneset.*
6. *Gaussian input noise, bandwidth 6kHz, maximum input level corresponds to 1-digit code falsing rate. $\bar{F}$ = random single character.*
7. *Delay from change of input (tone applied/removed) to change at $Q_0 - Q_3$ outputs (see fig. 5).*
8. *Included in T_2. Minimum tone gap requirement for 'notone' recognition. Outputs = F after delay. (see fig. 5).*

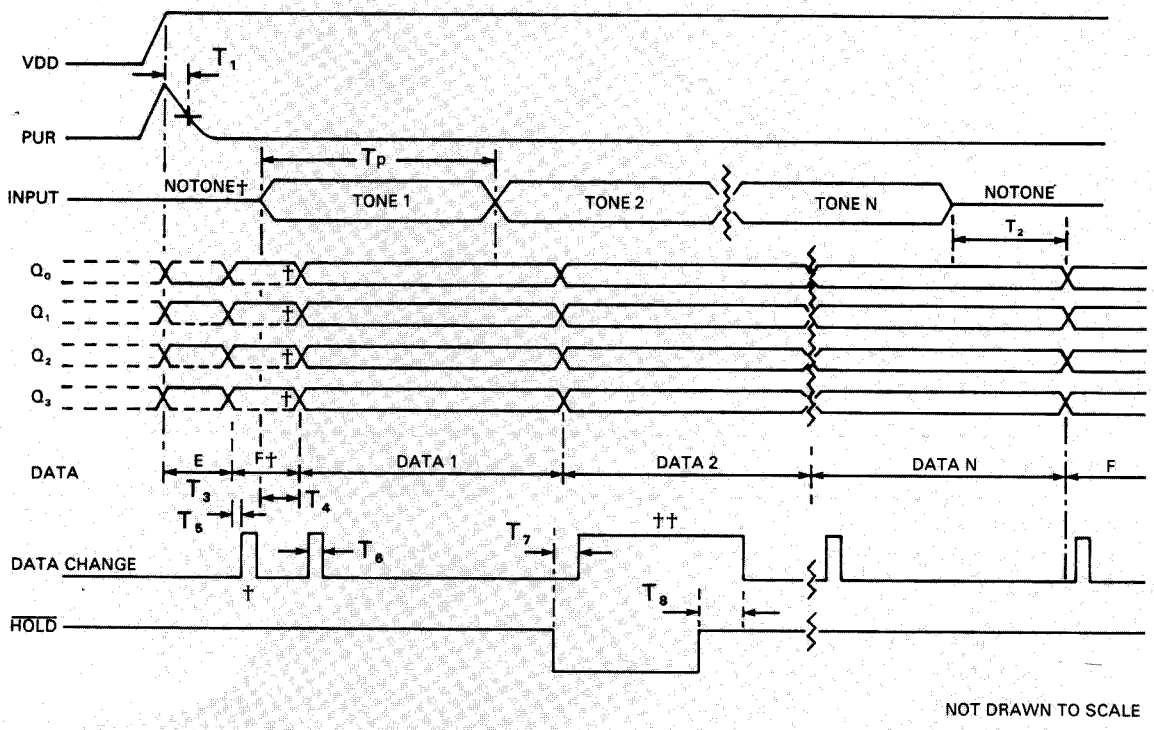

Fig. 5 FX003 Timing Diagram (See References)* ** QC, QZ, QE, QA, QZS*

Typical Performance

References:

T_1 Logic 1, > 2 ms
T_2 > 33 ms & < 50 ms
T_3 33 ms (DATA E)
T_4 20 ms minimum (Tp MAXIMUM)
T_5 0.5 ms — 1.0 ms (DATA CHANGE)
T_6 1.0 ms (DATA CHANGE PULSE DURATION)
T_7 > 50 μs
T_8 < 120 μs

† *Q_0 — Q_3 will represent the input frequency present during and after PUR (shown as 'F' (Notone) in this example).*

†† *After application of $\overline{HOLD}$ the next Data Change pulse will stay high until $\overline{HOLD}$ is removed according to timing shown.*

The ceramic dual-in-line package of the FX003 is shown in *Figure 6* and the chip carrier version shown in *Figure 7.* For the D.I.L. package, the pins number counter-clockwise (top view) from 1 with reference to a notch as a guidance. For the chip carrier package, pins number counter-clockwise (viewed from above) from the long pad (pad 1).

Handling Precautions

The FX003 is a CMOS LSI circuit which includes input protection. However, precautions should be taken to prevent static discharges which can cause damage.

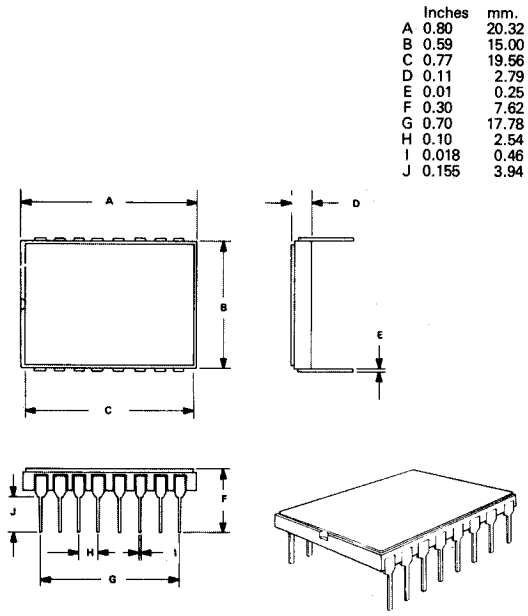

	Inches	mm.
A	0.80	20.32
B	0.59	15.00
C	0.77	19.56
D	0.11	2.79
E	0.01	0.25
F	0.30	7.62
G	0.70	17.78
H	0.10	2.54
I	0.018	0.46
J	0.155	3.94

Fig. 7 FX102K/202*K Chip Carrier Package

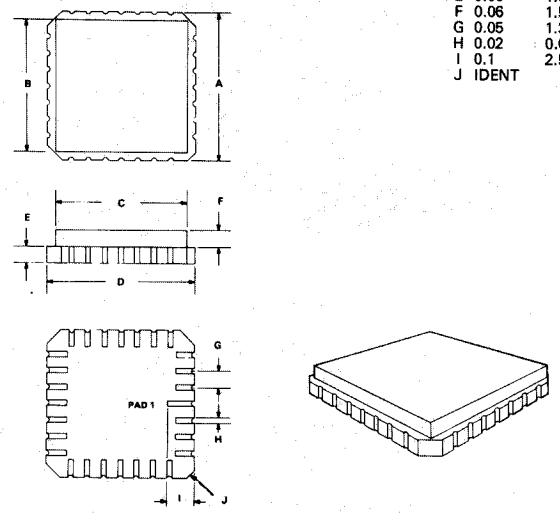

	Inches	mm.
A	0.45	11.4
B	0.41	10.4
C	0.41	10.4
D	0.45	11.4
E	0.06	1.5
F	0.06	1.5
G	0.05	1.3
H	0.02	0.051
I	0.1	2.54
J	IDENT	

** QC, QZ, QE, QA, QZS*

FX003* **16-pin Ceramic D.I.L.**
FX102K **28-pad Ceramic Chip Carrier**
FX202*K **28-pad Ceramic Chip Carrier**

*** VERSIONS**
- **QC : CCIR**
- **QZ : ZVEI**
- **QE : EEA**
- **QA : EIA**
- **QZS : Suppressed ZVEI**

Note: *FX102K & FX202*K are available in pairs only.*

CML does not assume any responsibility for the use of any circuitry described. No circuit patent licences are implied and CML reserves the right at any time without notice to change the said circuitry.

Littlediode supplies new, hard to find or obsolete electronic components and semiconductors all over the world.

With over two million different components listed you are sure to find the part you need.

Feel free to visit us today at our online store:

LittleDiode.com

Looking forward to providing you with the best possible service.