National Semiconductor

January 8, 2008

DS90UR241/DS90UR124 5-43 MHz DC-Balanced 24-Bit LVDS Serializer and Deserializer

General Description

The DS90UR241/124 Chipset translates a 24-bit parallel bus into a fully transparent data/control LVDS serial stream with embedded clock information. This single serial stream simplifies transferring a 24-bit bus over PCB traces and cable by eliminating the skew problems between parallel data and clock paths. It saves system cost by narrowing data paths that in turn reduce PCB layers, cable width, and connector size and pins.

The DS90UR241/124 incorporates LVDS signaling on the high-speed I/O. LVDS provides a low power and low noise environment for reliably transferring data over a serial transmission path. By optimizing the Serializer output edge rate for the operating frequency range EMI is further reduced.

In addition the device features pre-emphasis to boost signals over longer distances using lossy cables. Internal DC balanced encoding/decoding is used to support AC-Coupled interconnects. Using National Semiconductor's proprietary random lock, the Serializer's parallel data are randomized to the Deserializer without the need of REFCLK.

Features

- 5 MHz–43 MHz embedded clock and DC-Balanced 24:1 and 1:24 data transmission
- User defined pre-emphasis driving ability through external resistor on LVDS outputs and capable to drive up to 10 meters shielded twisted-pair cable
- User selectable clock edge for parallel data on both Transmitter and Receiver
- Supports AC-coupling data transmission
- Individual power-down controls for both Transmitter and Receiver
- Embedded clock CDR (Clock and Data Recovery) on Receiver and no source of reference clock required
- All codes RDL (random data lock) to support live-pluggable applications
- LOCK output flag to ensure data integrity at Receiver side
- Balanced T_{SETUP}/T_{HOLD} between RCLK and RDATA on Receiver side
- Adjustable PTO (progressive turn-on) LVCMOS outputs on Receiver to minimize EMI and SSO effects
- @Speed BIST to validate LVDS transmission path
- All LVCMOS inputs and control pins have internal pulldown
- On-chip filters for PLLs on Transmitter and Receiver
- 48-pin TQFP package for Transmitter and 64-pin TQFP package for Receiver
- Pure CMOS .35 µm process
- Power supply range 3.3V ± 10%
- Temperature range –40°C to +105°C
- Greater than 8 kV HBM ESD structure
- Meets ISO 10605 ESD and AEC-Q100 compliance
- Backward compatible mode with DS90C241/DS90C124

Block Diagram

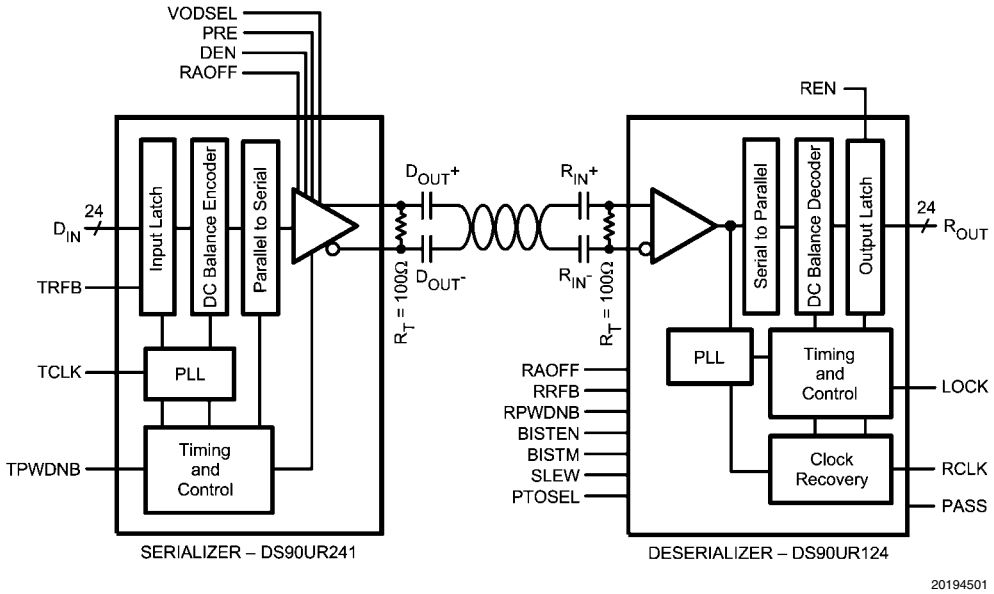

TRI-STATE® is a registered trademark of National Semiconductor Corporation.

© 2008 National Semiconductor Corporation

Absolute Maximum Ratings (Note)

If Military/Aerospace specified devices are required, please contact the National Semiconductor Sales Office/ Distributors for availability and specifications.

Supply Voltage (V_{DD})	−0.3V to +4V
LVCMOS Input Voltage	−0.3V to (V_{DD} +0.3V)
LVCMOS Output Voltage	−0.3V to (V_{DD} +0.3V)
LVDS Receiver Input Voltage	−0.3V to +3.9V
LVDS Driver Output Voltage	−0.3V to +3.9V
LVDS Output Short Circuit Duration	10 ms
Junction Temperature	+150°C
Storage Temperature	−65°C to +150°C
Lead Temperature (Soldering, 4 seconds)	+260°C
Maximum Package Power Dissipation Capacity	
Package De-rating:	$1/\theta_{JA}$ °C/W above +25°C
DS90UR241 − 48L TQFP	
θ_{JA}	45.8 (4L*); 75.4 (2L*) °C/W
θ_{JC}	21.0°C/W
DS90UR124 − 64L TQFP	
θ_{JA}	42.8 (4L*); 67.2 (2L*)°C/W
θ_{JC}	14.6°C/W
	*JEDEC
ESD Rating (HBM)	≥±8 kV
ESD Rating (ISO10605)	
R_D = 2 kΩ, C_S = 330 pF	DS90UR241 meets ISO 10605
Contact Discharge (D_{OUT+}, D_{OUT-})	±10 kV
Air Discharge (D_{OUT+}, D_{OUT-})	±30 kV
R_D = 2 kΩ, C_S = 330 pF	DS90UR124 meets ISO 10605
Contact Discharge (R_{IN+}, R_{IN-})	±10 kV
Air Discharge (R_{IN+}, R_{IN-})	±30 kV

Recommended Operating Conditions

	Min	Nom	Max	Units
Supply Voltage (V_{DD})	3.0	3.3	3.6	V
Operating Free Air Temperature (T_A)	−40	+25	+105	°C
Clock Rate	5		43	MHz
Supply Noise			±100	mV_{P-P}

Electrical Characteristics

Over recommended operating supply and temperature ranges unless otherwise specified.

Symbol	Parameter	Conditions	Pin/Freq.	Min	Typ	Max	Units
LVCMOS DC SPECIFICATIONS							
V_{IH}	High Level Input Voltage		**Tx:** D_{IN}[0:23], TCLK, TPWDNB, DEN, TRFB, RAOFF, VODSEL, RES0. **Rx:** RPWDNB, RRFB, REN, PTOSEL, BISTEN, BISTM, SLEW, RES0.	2.0		V_{DD}	V
V_{IL}	Low Level Input Voltage			GND		0.8	V
V_{CL}	Input Clamp Voltage	I_{CL} = −18 mA			−0.8	−1.5	V
I_{IN}	Input Current	V_{IN} = 0V or 3.6V	**Tx:** D_{IN}[0:23], TCLK, TPWDNB, DEN, TRFB, RAOFF, RES0. **Rx:** RRFB, REN, PTOSEL, BISTEN, BISTM, SLEW, RES0.	−10	±2	+10	µA
			Rx: RPWDNB	−20	±5	+20	µA
V_{OH}	High Level Output Voltage	I_{OH} = −2 mA, SLEW = L I_{OH} = −4 mA, SLEW = H	**Rx:** R_{OUT}[0:23], RCLK, LOCK, PASS.	2.3	3.0	V_{DD}	V
V_{OL}	Low Level Output Voltage	I_{OL} = +2 mA, SLEW = L I_{OL} = +4 mA, SLEW = H		GND	0.33	0.5	V
I_{OS}	Output Short Circuit Current	V_{OUT} = 0V		−40	−70	−110	mA
I_{OZ}	TRI-STATE® Output Current	RPWDNB, REN = 0V, V_{OUT} = 0V or V_{DD}	**Rx:** R_{OUT}[0:23], RCLK, LOCK, PASS.	−30	±0.4	+30	µA

Symbol	Parameter	Conditions		Pin/Freq.	Min	Typ	Max	Units
LVDS DC SPECIFICATIONS								
V_{TH}	Differential Threshold High Voltage	V_{CM} = +1.8V		**Rx:** R_{IN+}, R_{IN-}			+50	mV
V_{TL}	Differential Threshold Low Voltage				–50			mV
I_{IN}	Input Current	V_{IN} = +2.4V, V_{DD} = 3.6V				±100	±250	µA
		V_{IN} = 0V, V_{DD} = 3.6V				±100	±250	µA
V_{OD}	Output Differential Voltage (D_{OUT+})–(D_{OUT-})	R_L = 100Ω, w/o pre-emphasis *(Figure 10)*	VODSEL = L	**Tx:** D_{OUT+}, D_{OUT-}	380	500	630	mV
			VODSEL = H		500	900	1100	
ΔV_{OD}	Output Differential Voltage Unbalance	R_L = 100Ω, w/o pre-emphasis	VODSEL = L			1	50	mV
			VODSEL = H					
V_{OS}	Offset Voltage	R_L = 100Ω, w/o pre-emphasis	VODSEL = L		1.00	1.25	1.50	V
			VODSEL = H					
ΔV_{OS}	Offset Voltage Unbalance	R_L = 100Ω, w/o pre-emphasis	VODSEL = L			3	50	mV
			VODSEL = H					
I_{OS}	Output Short Circuit Current	D_{OUT} = 0V, D_{IN} = H, TPWDNB = 2.4V	VODSEL = L		–2.0	–5.0	–8.0	mA
			VODSEL = H		–4.5	–7.9	–14.0	
I_{OZ}	TRI-STATE Output Current	TPWDNB = 0V, D_{OUT} = 0V OR V_{DD}			–15	±1	+15	µA
		TPWDNB = 2.4V, DEN = 0V D_{OUT} = 0V OR V_{DD}			–15	±1	+15	µA
		TPWDNB = 2.4V, DEN = 2.4V, D_{OUT} = 0V OR V_{DD} NO LOCK (NO TCLK)			–15	±1	+15	µA
SER/DES SUPPLY CURRENT (DVDD*, PVDD* AND AVDD* PINS) ****DIGITAL, PLL, AND ANALOG VDDS***								
I_{DDT}	Serializer Total Supply Current (includes load current)	R_L = 100Ω, PRE = OFF, RAOFF = H, VODSEL = L		f = 43 MHz, CHECKER BOARD Pattern *(Figure 1)*		60	85	mA
		R_L = 100Ω, PRE = 12 kΩ, RAOFF = H, VODSEL = L				65	90	mA
		R_L = 100Ω, PRE = OFF, RAOFF = H, VODSEL = H		f = 43 MHz, RANDOM pattern		66	90	mA
I_{DDTZ}	Serializer Supply Current Power-down	TPWDNB = 0V (All other LVCMOS Inputs = 0V)					45	µA
I_{DDR}	Deserializer Total Supply Current (includes load current)	C_L = 4 pF, SLEW = H		f = 43 MHz, CHECKER BOARD Pattern LVCMOS Output *(Figure 2)*		85	105	mA
		C_L = 4 pF, SLEW = H		f = 43 MHz, RANDOM pattern LVCMOS Output		80	100	mA
I_{DDRZ}	Deserializer Supply Current Power-down	RPWDNB = 0V (All other LVCMOS Inputs = 0V, R_{IN+}/R_{IN-} = 0V)					50	µA

Serializer Input Timing Requirements for TCLK

Over recommended operating supply and temperature ranges unless otherwise specified.

Symbol	Parameter	Conditions	Min	Typ	Max	Units
t_{TCP}	Transmit Clock Period	*(Figure 5)*	23.25	T	200	ns
t_{TCIH}	Transmit Clock High Time		0.3T	0.5T	0.7T	ns
t_{TCIL}	Transmit Clock Low Time		0.3T	0.5T	0.7T	ns
t_{CLKT}	TCLK Input Transition Time	(Note 8), *(Figure 4)*		2.5		ns
t_{JIT}	TCLK Input Jitter	(Note 9)			±100	ps

Serializer Switching Characteristics

Over recommended operating supply and temperature ranges unless otherwise specified.

Symbol	Parameter	Conditions	Min	Typ	Max	Units
t_{LLHT}	LVDS Low-to-High Transition Time	R_L = 100Ω, VODSEL = L, C_L = 10 pF to GND, *(Figure 3)*		245	550	ps
t_{LHLT}	LVDS High-to-Low Transition Time			264	550	ps
t_{DIS}	D_{IN} (0:23) Setup to TCLK	R_L = 100Ω, C_L = 10 pF to GND, (Note 8), *(Figure 5)*	4			ns
t_{DIH}	D_{IN} (0:23) Hold from TCLK		4			ns
t_{HZD}	D_{OUT} ± HIGH to TRI-STATE Delay	R_L = 100Ω, C_L = 10 pF to GND, (Note 5), *(Figure 6)*		10	15	ns
t_{LZD}	D_{OUT} ± LOW to TRI-STATE Delay			10	15	ns
t_{ZHD}	D_{OUT} ± TRI-STATE to HIGH Delay			75	150	ns
t_{ZLD}	D_{OUT} ± TRI-STATE to LOW Delay			75	150	ns
t_{PLD}	Serializer PLL Lock Time	R_L = 100Ω			10	ms
t_{SD}	Serializer Delay	R_L = 100Ω, PRE = OFF, RAOFF = L, TRFB = H, *(Figure 8)*	3.5T+2		3.5T+10	ns
		R_L = 100Ω, PRE = OFF, RAOFF = L, TRFB = L, *(Figure 8)*	3.5T+2		3.5T+10	ns
TxOUT_E_O	**TxOUT_E**ye_**O**pening. TxOUT_E_O centered on (tBIT/)2	5 MHz–43 MHz, R_L = 100Ω, C_L = 10 pF to GND, RANDOM pattern (Notes 9, 10, 13), *(Figure 9)*	0.76	0.84		UI

Deserializer Switching Characteristics

Over recommended operating supply and temperature ranges unless otherwise specified.

Symbol	Parameter	Conditions	Pin/Freq.	Min	Typ	Max	Units
t_{RCP}	**R**eceiver out **C**lock **P**eriod	t_{RCP} = t_{TCP}, PTOSEL = H	RCLK *(Figure 15)*	23.25	T	200	ns
t_{RDC}	**R**CLK **D**uty **C**ycle	PTOSEL = H, SLEW = L		45	50	55	%
t_{CLH}	LV**C**MOS **L**ow-to-**H**igh Transition Time	C_L = 4 pF (lumped load), SLEW = H (Note 8)	R_{OUT} [0:23], RCLK, LOCK		1.5	2.5	ns
t_{CHL}	LV**C**MOS **H**igh-to-**L**ow Transition Time				1.5	2.5	ns
t_{CLH}	LV**C**MOS **L**ow-to-**H**igh Transition Time	C_L = 4 pF (lumped load), SLEW = L (Note 8)	R_{OUT} [0:23], RCLK, LOCK		2.0	3.5	ns
t_{CHL}	LV**C**MOS **H**igh-to-**L**ow Transition Time				2.0	3.5	ns
t_{ROS}	**R**$_{OUT}$ (0:7) **S**etup Data to RCLK (Group 1)	PTOSEL = L, SLEW = H, *(Figure 16)*	R_{OUT}[0:7]	(0.35)* t_{RCP}	(0.5*t_{RCP})–3 UI		ns
t_{ROH}	**R**$_{OUT}$ (0:7) **H**old Data to RCLK (Group 1)			(0.35)* t_{RCP}	(0.5*t_{RCP})–3 UI		ns

Symbol	Parameter	Conditions	Pin/Freq.	Min	Typ	Max	Units
t_{ROS}	**R**$_{OUT}$ (8:15) **S**etup Data to RCLK (Group 2)	PTOSEL = L, SLEW = H, *(Figure 16)*	R_{OUT} [8:15], LOCK	(0.35)* t_{RCP}	(0.5*t_{RCP})–3 UI		ns
t_{ROH}	**R**$_{OUT}$ (8:15) **H**old Data to RCLK (Group 2)			(0.35)* t_{RCP}	(0.5*t_{RCP})–3 UI		ns
t_{ROS}	**R**$_{OUT}$ (16:23) **S**etup Data to RCLK (Group 3)		R_{OUT} [16:23]	(0.35)* t_{RCP}	(0.5*t_{RCP})–3 UI		ns
t_{ROH}	**R**$_{OUT}$ (16:23) **S**etup Data to RCLK (Group 3)			(0.35)* t_{RCP}	(0.5*t_{RCP})–3 UI		ns
t_{ROS}	**R**$_{OUT}$ (0:7) **S**etup Data to RCLK (Group 1)	PTOSEL = H, SLEW = H, *(Figure 15)*	R_{OUT}[0:7]	(0.35)* t_{RCP}	(0.5*t_{RCP})–2 UI		ns
t_{ROH}	**R**$_{OUT}$ (0:7) **H**old Data to RCLK (Group 1)			(0.35)* t_{RCP}	(0.5*t_{RCP})+2 UI		ns
t_{ROS}	**R**$_{OUT}$ (8:15) **S**etup Data to RCLK (Group 2)		R_{OUT} [8:15], LOCK	(0.35)* t_{RCP}	(0.5*t_{RCP})–1 UI		ns
t_{ROH}	**R**$_{OUT}$ (8:15) **H**old Data to RCLK (Group 2)			(0.35)* t_{RCP}	(0.5*t_{RCP})+1 UI		ns
t_{ROS}	**R**$_{OUT}$ (16:23) **S**etup Data to RCLK (Group 3)		R_{OUT} [16:23]	(0.35)* t_{RCP}	(0.5*t_{RCP})+1 UI		ns
t_{ROH}	**R**$_{OUT}$ (16:23) **S**etup Data to RCLK (Group 3)			(0.35)* t_{RCP}	(0.5*t_{RCP})–1 UI		ns
t_{HZR}	**H**IGH to TRI-STATE Delay	PTOSEL = H, *(Figure 14)*	R_{OUT} [0:23], RCLK, LOCK		3	10	ns
t_{LZR}	**L**OW to TRI-STATE Delay				3	10	ns
t_{ZHR}	TRI-STATE to **H**IGH Delay				3	10	ns
t_{ZLR}	TRI-STATE to **L**OW Delay				3	10	ns
t_{DD}	**D**eserializer **D**elay	PTOSEL = H, *(Figure 12)*	RCLK		[5+(5/56)]T+3.7	[5+(5/56)]T +8	ns
t_{DSR}	Deserializer PLL Lock Time from Powerdown	(Notes 6, 8)	5 MHz			128k*T	ms
			43 MHz			128k*T	ms
RxIN_TOL-L	**R**eceiver **IN**put **TOL**erance **L**eft	(Notes 7, 8, 10), *(Figure 17)*	5 MHz–43 MHz			0.25	UI
RxIN_TOL-R	**R**eceiver **IN**put **TOL**erance **R**ight	(Notes 7, 8, 10), *(Figure 17)*	5 MHz–43 MHz			0.25	UI

Note 1: "Absolute Maximum Ratings" indicate limits beyond which damage to the device may occur, including inoperability and degradation of device reliability and/or performance. Functional operation of the device and/or non-degradation at the Absolute Maximum Ratings or other conditions beyond those indicated in the Recommended Operating Conditions is not implied. The Recommended Operating Conditions indicate conditions at which the device is functional and the device should not be operated beyond such conditions.

Note 2: The Electrical Characteristics tables list guaranteed specifications under the listed Recommended Operating Conditions except as otherwise modified or specified by the Electrical Characteristics Conditions and/or Notes. Typical specifications are estimations only and are not guaranteed.

Note 3: Typical values represent most likely parametric norms at V_{DD} = 3.3V, Ta = +25 degC, and at the Recommended Operation Conditions at the time of product characterization and are not guaranteed.

Note 4: Current into device pins is defined as positive. Current out of a device pin is defined as negative. Voltages are referenced to ground except VOD, ΔVOD, VTH and VTL which are differential voltages.

Note 5: When the Serializer output is tri-stated, the Deserializer will lose PLL lock. Resynchronization MUST occur before data transfer.

Note 6: t_{DSR} is the time required by the Deserializer to obtain lock when exiting powerdown mode.

Note 7: RxIN_TOL is a measure of how much phase noise (jitter) the Deserializer can tolerate in the incoming data stream before bit errors occur. It is a measurement in reference with the ideal bit position, please see National's AN-1217 for detail.

Note 8: Specification is guaranteed by characterization and is not tested in production.

Note 9: t_{JIT} (@BER of 10e-9) specifies the allowable jitter on TCLK. t_{JIT} not included in TxOUT_E_O parameter.

Note 10: UI – Unit Interval, equivalent to one ideal serialized data bit width. The UI scales with frequency.

Note 11: *Figures 1*, *2*, *8*, *12*, *14* show a falling edge data strobe (TCLK IN/RCLK OUT).

Note 12: *Figures 5*, *15*, *16* show a rising edge data strobe (TCLK IN/RCLK OUT).

Note 13: TxOUT_E_O is affected by pre-emphasis value.

AC Timing Diagrams and Test Circuits

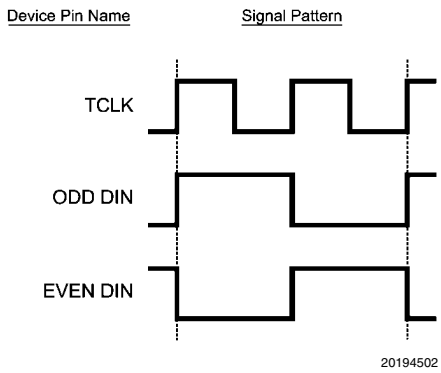

FIGURE 1. Serializer Input Checkerboard Pattern

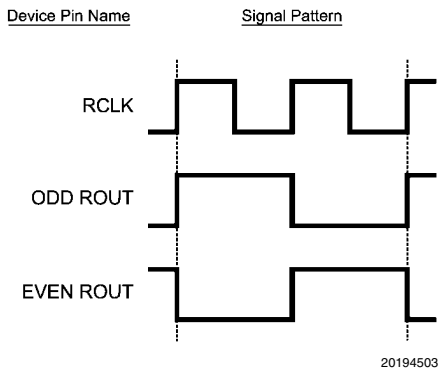

FIGURE 2. Deserializer Output Checkerboard Pattern

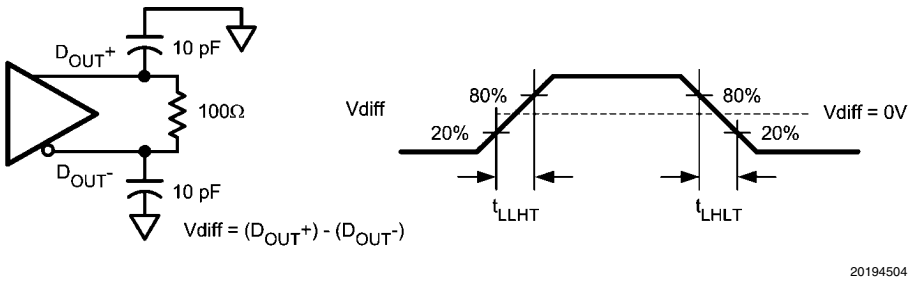

FIGURE 3. Serializer LVDS Output Load and Transition Times

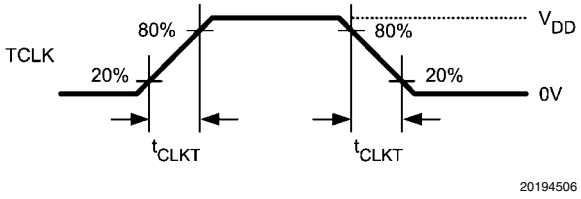

FIGURE 4. Serializer Input Clock Transition Times

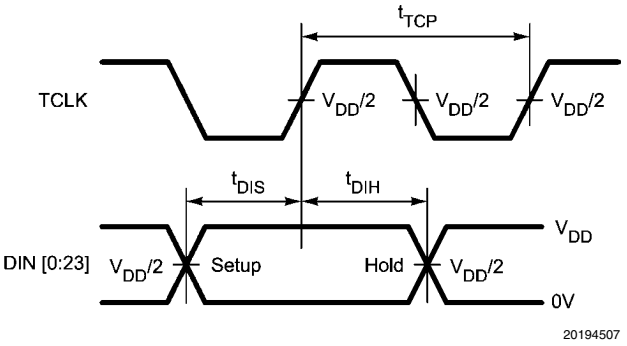

FIGURE 5. Serializer Setup/Hold Times

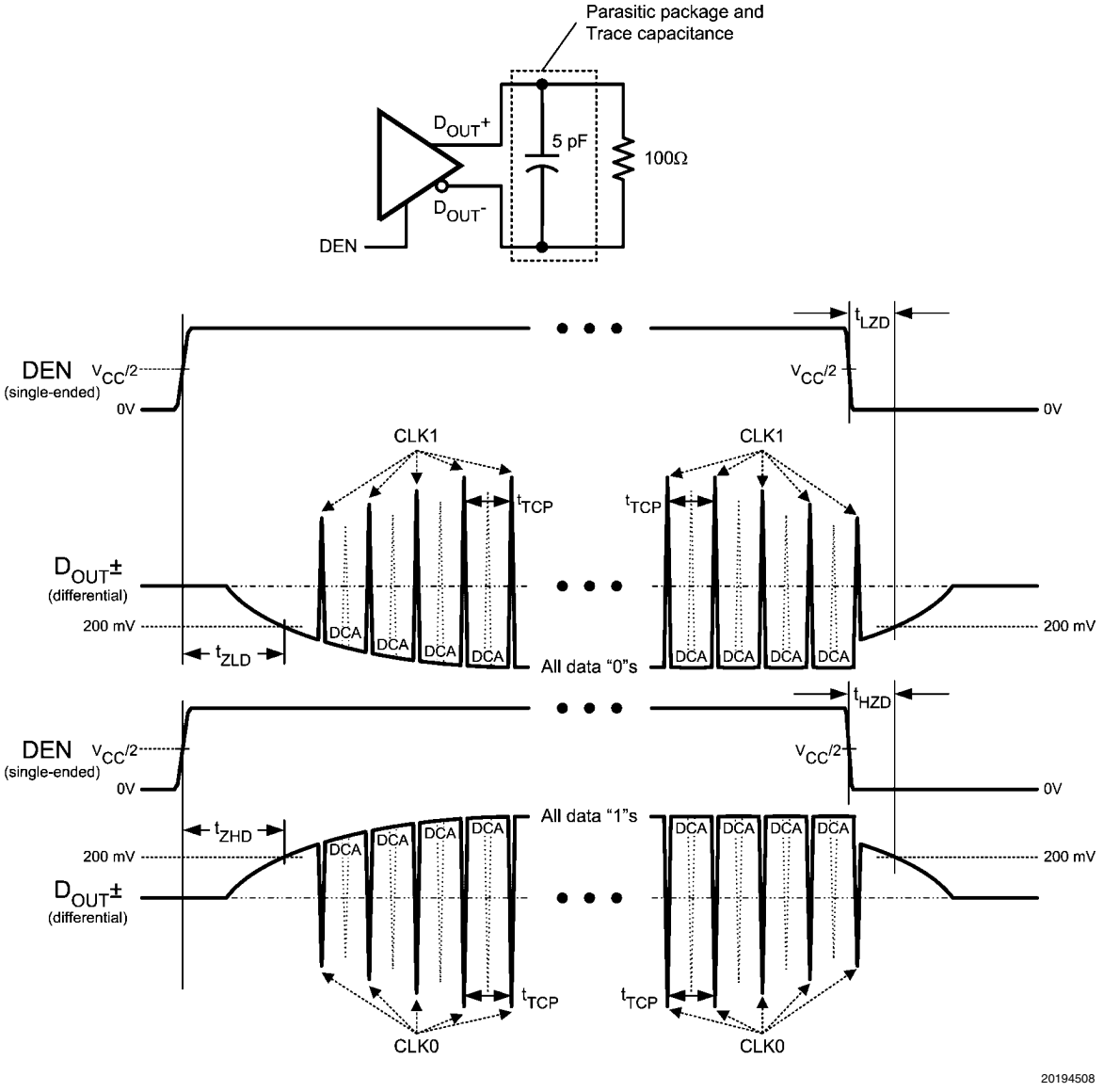

FIGURE 6. Serializer TRI-STATE Test Circuit and Delay

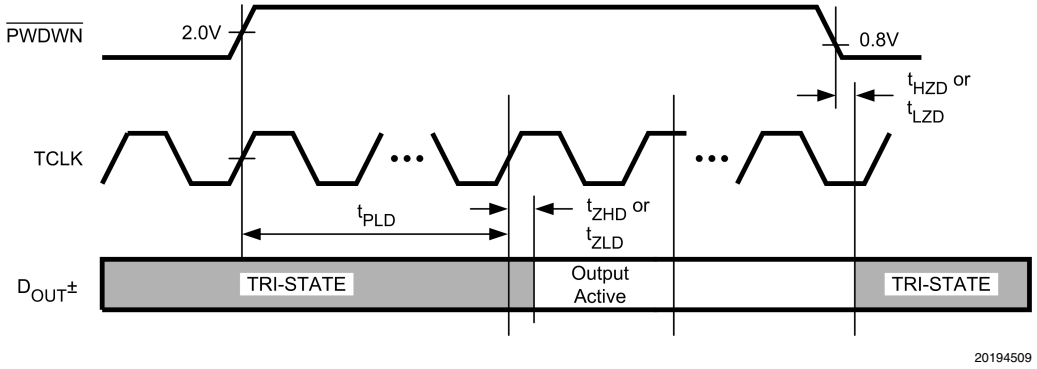

FIGURE 7. Serializer PLL Lock Time, and TPWDNB TRI-STATE Delays

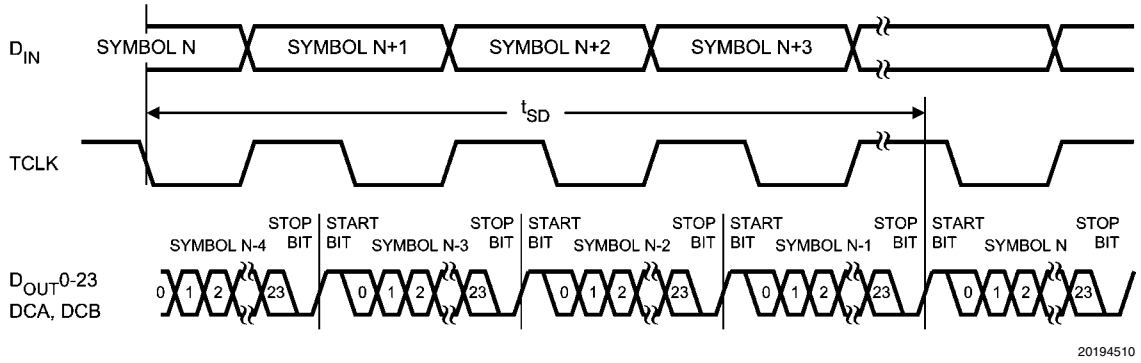

FIGURE 8. Serializer Delay

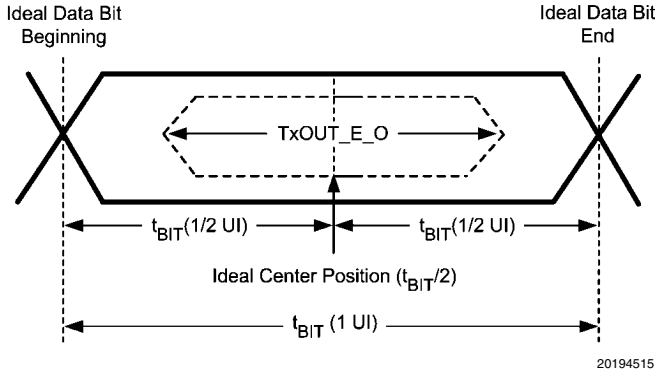

FIGURE 9. Transmitter Output Eye Opening (TxOUT_E_O)

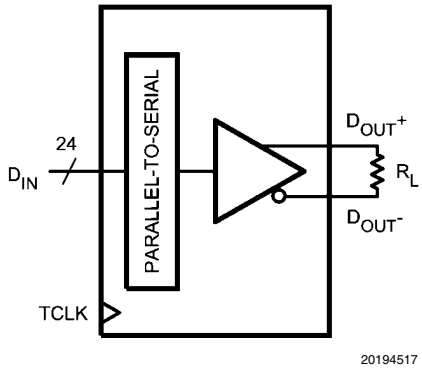

VOD = (D_{OUT+}) − (D_{OUT-})
Differential output signal is shown as (D_{OUT+}) − (D_{OUT-}), device in Data Transfer mode.

FIGURE 10. Serializer V_{OD} Diagram

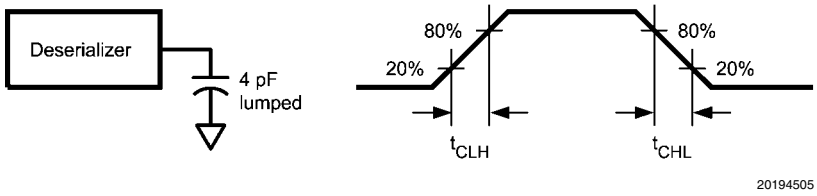

FIGURE 11. Deserializer LVCMOS Output Load and Transition Times

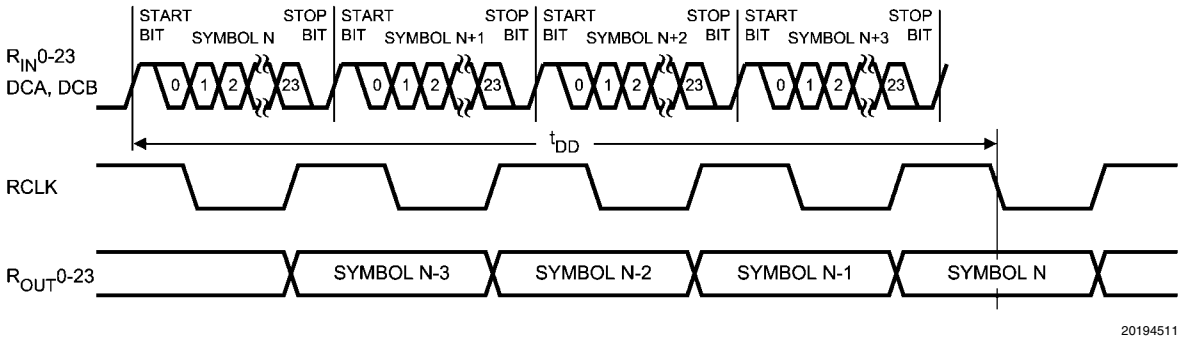

FIGURE 12. Deserializer Delay

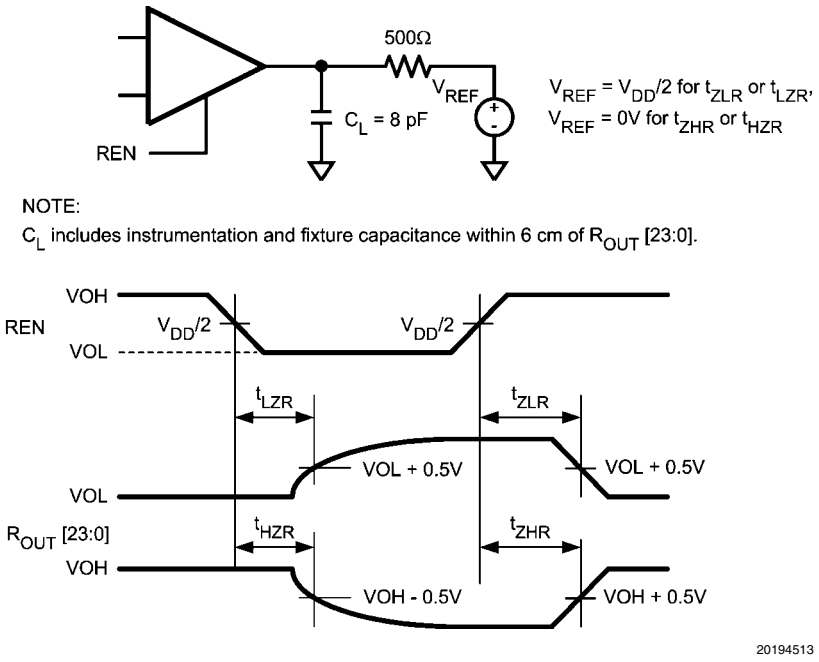

FIGURE 13. Deserializer TRI-STATE Test Circuit and Timing

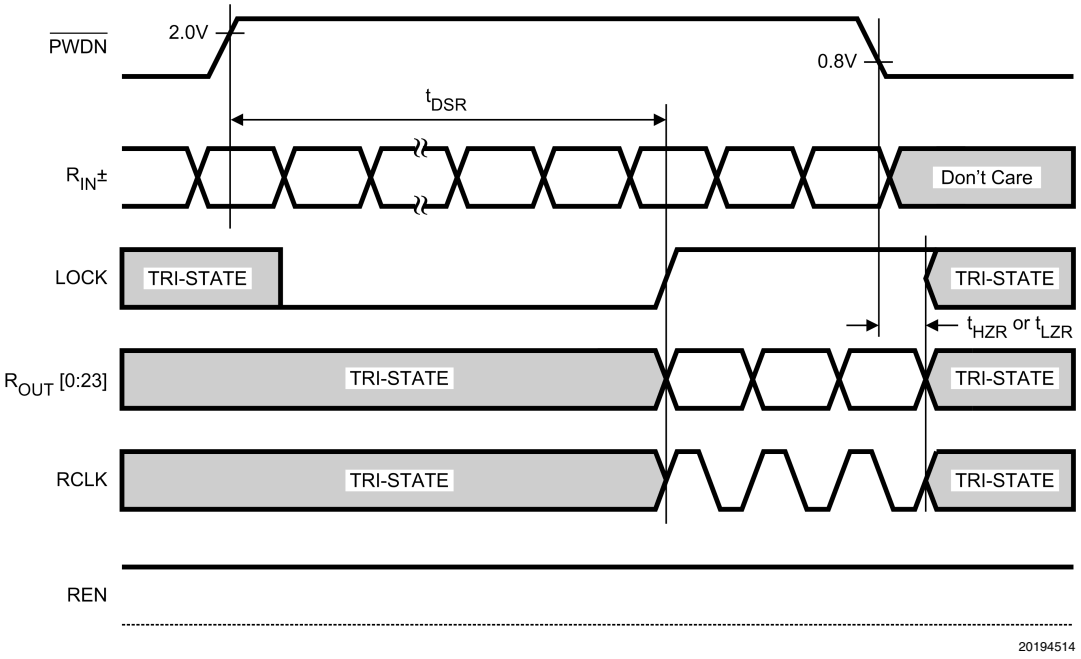

FIGURE 14. Deserializer PLL Lock Times and RPWDNB TRI-STATE Delay

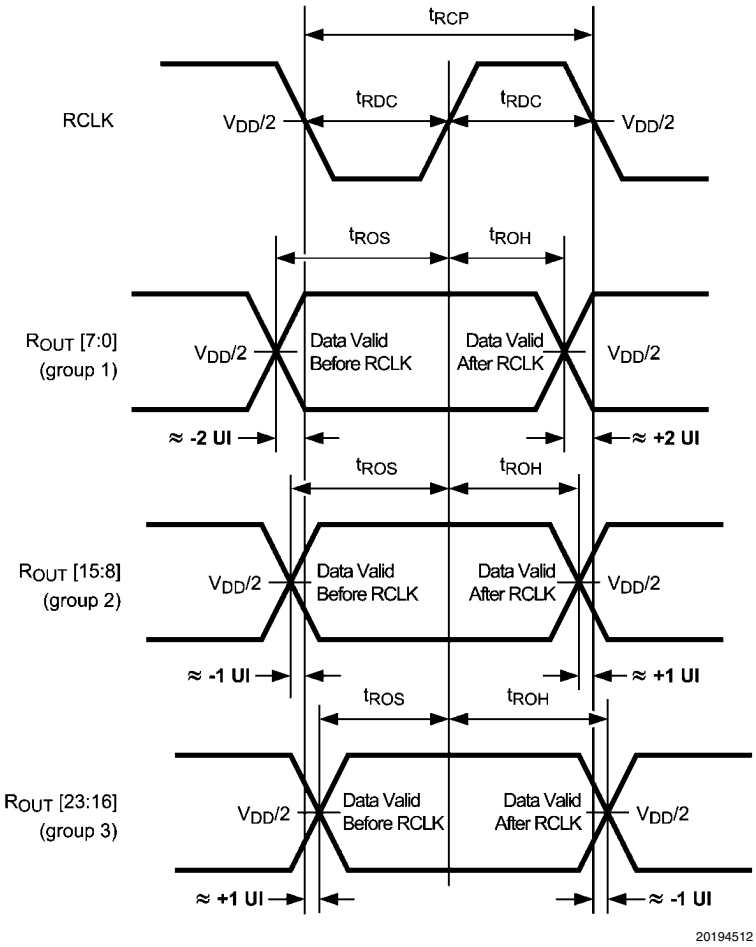

FIGURE 15. Deserializer Setup and Hold Times and PTO, PTOSEL = H

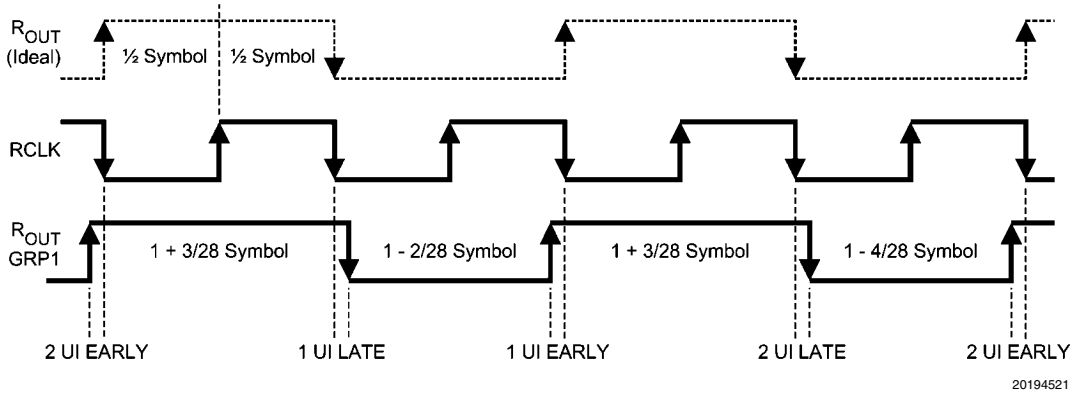

Group 1 will be latched internally by sequence of (early 2UI, late 1UI, early 1UI, late 2UI)
Group 2 will be latched internally by sequence of (late 1UI, early 1UI, late 2UI, early 2UI)
Group 3 will be latched internally by sequence of (early 1UI, late 2UI, early 2UI, late 1UI)

FIGURE 16. Deserializer Setup and Hold Times and PTO Spread, PTOSEL = L

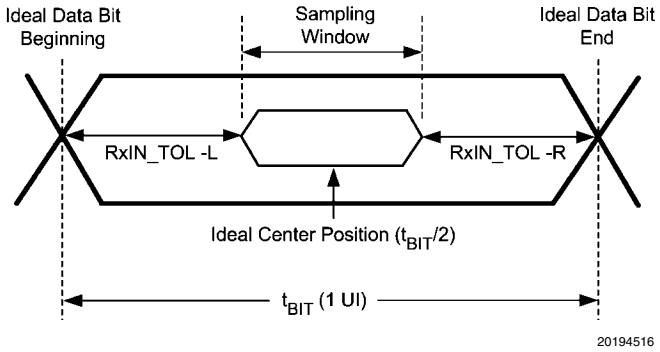

RxIN_TOL_L is the ideal noise margin on the left of the figure, with respect to ideal.
RxIN_TOL_R is the ideal noise margin on the right of the figure, with respect to ideal.

FIGURE 17. Receiver Input Tolerance (RxIN_TOL) and Sampling Window

DS90UR241 Serializer Pin Descriptions

Pin #	Pin Name	I/O/PWR	Description
LVCMOS PARALLEL INTERFACE PINS			
4-1, 48-44, 41-32, 29-25	D_{IN}[23:0]	LVCMOS_I	Transmitter Parallel Interface Data Input Pins. Tie LOW if unused, do not float.
10	TCLK	LVCMOS_I	Transmitter Parallel Interface Clock Input Pin. Strobe edge set by TRFB configuration pin.
CONTROL AND CONFIGURATION PINS			
9	TPWDNB	LVCMOS_I	Transmitter Power Down Bar TPWDNB = H; Transmitter is Enabled and ON TPWDNB = L; Transmitter is in power down mode (Sleep), LVDS Driver D_{OUT} (+/-) Outputs are in TRI-STATE stand-by mode, PLL is shutdown to minimize power consumption.
24	VODSEL	LVCMOS_I	VOD Level Select VODSEL = L; LVDS Driver Output is ±500 mV (R_L = 100Ω) VODSEL = H; LVDS Driver Output is ±900 mV (R_L = 100Ω) For normal applications, set this pin LOW. For long cable applications where a larger VOD is required, set this pin HIGH.
18	DEN	LVCMOS_I	Transmitter Data Enable DEN = H; LVDS Driver Outputs are Enabled (ON). DEN = L; LVDS Driver Outputs are Disabled (OFF), Transmitter LVDS Driver D_{OUT} (+/-) Outputs are in TRI-STATE, PLL still operational and locked to TCLK.
23	PRE	LVCMOS_I	Pre-emphasis Level Select PRE = NC (No Connect); Pre-emphasis is Disabled (OFF). Pre-emphasis is active when input is tied to VSS through external resistor R_{PRE}. Resistor value determines pre-emphasis level. Recommended value $R_{PRE} \geq 6$ kΩ; $I_{max} = [48 / R_{PRE}]$, $R_{PREmin} = 6$ kΩ
11	TRFB	LVCMOS_I	Transmitter Clock Edge Select Pin TRFB = H; Parallel Interface Data is strobed on the Rising Clock Edge. TRFB = L; Parallel Interface Data is strobed on the Falling Clock Edge
12	RAOFF	LVCMOS_I	Randomizer Control Input Pin RAOFF = H, Backwards compatible mode for use with DS90**C**124 Deserializer. RAOFF = L; Additional randomization ON (Default), Selects 2E7 LSFR setting. See *Table 1* for more details.
5, 8, 13	RES0	LVCMOS_I	Reserved. This pin **MUST** be tied LOW.
LVDS SERIAL INTERFACE PINS			
20	D_{OUT+}	LVDS_O	Transmitter LVDS True **(+)** Output. This output is intended to be loaded with a 100Ω load to the D_{OUT+} pin. The interconnect should be AC Coupled to this pin with a 100 nF capacitor.
19	D_{OUT-}	LVDS_O	Transmitter LVDS Inverted **(-)** Output This output is intended to be loaded with a 100Ω load to the D_{OUT-} pin. The interconnect should be AC Coupled to this pin with a 100 nF capacitor.
POWER / GROUND PINS			
22	VDD	VDD	Analog Voltage Supply, LVDS Output POWER
21	VSS	GND	Analog Ground, LVDS Output GROUND
16	VDD	VDD	Analog Voltage Supply, VCO POWER
17	VSS	GND	Analog Ground, VCO GROUND
14	VDD	VDD	Analog Voltage Supply, PLL POWER
15	VSS	GND	Analog Ground, PLL GROUND
30	VDD	VDD	Digital Voltage Supply, Serializer POWER
31	VSS	GND	Digital Ground, Serializer GROUND
7	VDD	VDD	Digital Voltage Supply, Serializer Logic POWER

Pin #	Pin Name	I/O/PWR	Description
6	VSS	GND	Digital Ground, Serializer Logic GROUND
42	VDD	VDD	Digital Voltage Supply, Serializer INPUT POWER
43	VSS	GND	Digital Ground, Serializer Input GROUND

DS90UR241 Pin Diagram

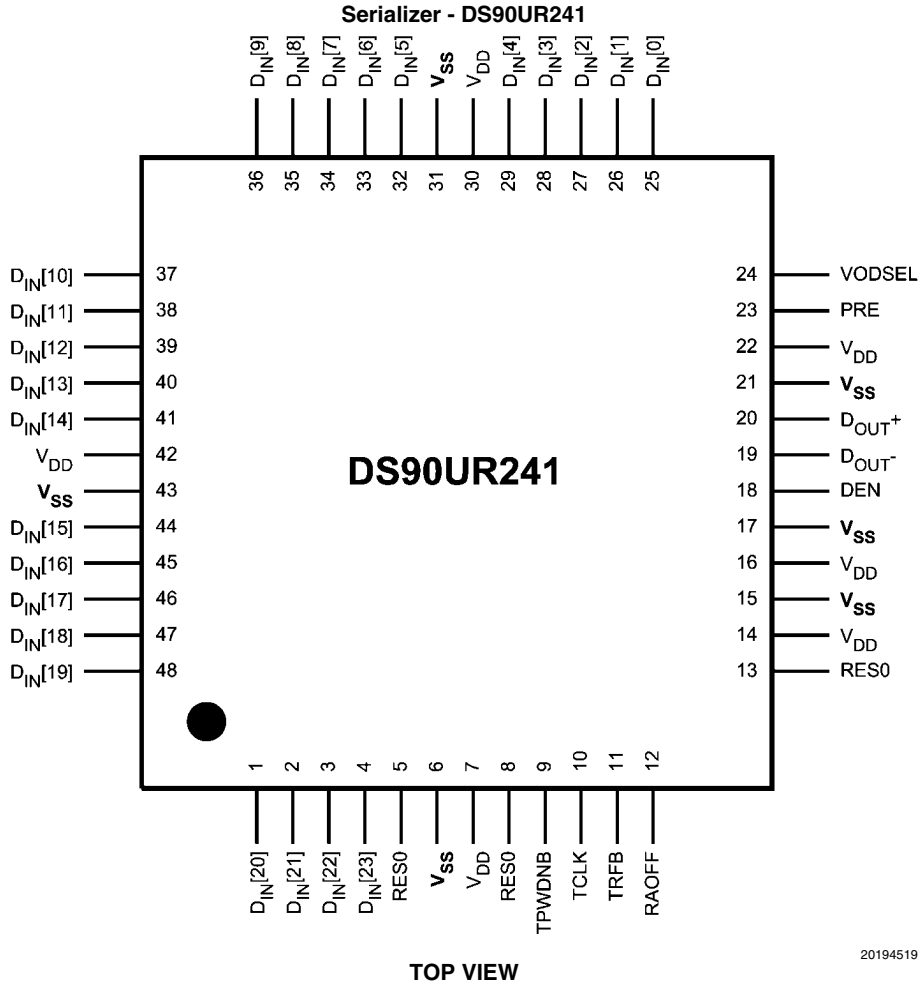

DS90UR124 Deserializer Pin Descriptions

Pin #	Pin Name	I/O/PWR	Description
LVCMOS PARALLEL INTERFACE PINS			
35-38, 41-44	R_{OUT}[7:0]	LVCMOS_O	Receiver Parallel Interface Data Outputs – Group 1
19-22, 27-30	R_{OUT}[15:8]	LVCMOS_O	Receiver Parallel Interface Data Outputs – Group 2
7-10, 13-16	R_{OUT}[23:16]	LVCMOS_O	Receiver Parallel Interface Data Outputs – Group 3
24	RCLK	LVCMOS_O	Parallel Interface Clock Output Pin. Strobe edge set by RRFB configuration pin.
CONTROL AND CONFIGURATION PINS			
55	RRFB	LVCMOS_I	Receiver Clock Edge Select Pin RRFB = H; R_{OUT} LVCMOS Outputs strobed on the Rising Clock Edge. RRFB = L; R_{OUT} LVCMOS Outputs strobed on the Falling Clock Edge.
60	REN	LVCMOS_I	Receiver Data Enable REN = H; R_{OUT}[23-0] and RCLK are Enabled (ON). REN = L; R_{OUT}[23-0] and RCLK are Disabled (OFF), Receiver R_{OUT}[23-0] and RCLK Outputs are in TRI-STATE, PLL still operational and locked to TCLK.
48	RPWDNB	LVCMOS_I	Receiver Power Down Bar RPWDNB = H; Receiver is Enabled and ON RPWDNB = L; Receiver is in power down mode (Sleep), R_{OUT}[23-0], RCLK, and LOCK are in TRI-STATE stand-by mode, PLL is shutdown to minimize power consumption.
49	PTOSEL	LVCMOS_I	Progressive Turn On Operation Selection PTO = H; R_{OUT}[23:0] are grouped into three groups of eight, with each group switching about ±1 UI to ±2 UI apart relative to RCLK. *(Figure 15)* PTO = L; PTO Spread Mode, R_{OUT}[23:0] outputs are spread ±1 UI to ±2 UI and RCLK spread ±1 UI. *(Figure 16)* See Applications Informations section for more details.
63	RAOFF	LVCMOS_I	Randomizer Control Input Pin RAOFF = H, Backwards compatible mode for use with DS90**C**241 Serializer. RAOFF = L; Additional randomization ON (Default), Selects 2E7 LSFR setting. See *Table 2* for more details.
64	SLEW	LVCMOS_I	LVCMOS Output Slew Rate Control SLEW = L; Low drive output at 2 mA (default) SLEW = H; High drive output at 4 mA
23	LOCK	LVCMOS_O	LOCK indicates the status of the receiver PLL LOCK = H; receiver PLL is locked LOCK = L; receiver PLL is unlocked, R_{OUT}[23-0] and RCLK are TRI-STATED
50	RES0	LVCMOS_I	Reserved. This pin **MUST** be tied LOW.
1-6, 17, 18, 33, 34	RES0	NC	No Connection. Pins are not physically connected to the die. Recommendation is to leave pin open or tie it to LOW.
BIST MODE PINS			
61	BISTEN	LVCMOS_I	Control Pin for BIST Mode Enable BISTEN = L; Default at Low, Normal Mode. BISTEN = H; BIST mode active. When BISTEN = H and DS90UR241 DIN[23:0] = Low or Floating; device will go to BIST mode accordingly. Check PASS output pin for test status. See Applications Informations section for more details.
62	BISTM	LVCMOS_I	BIST Mode selection. Control pin for which Deserializer is set for BIST reporting mode. BISTM = L; Default at Low, Status of all R_{OUT} with respective bit error on cycle-by-cycle basis BISTM = H; Total accumulated bit error count provided on ROUT[7:0] (binary counter up to 255) See Applications Informations section for more details.

Pin #	Pin Name	I/O/PWR	Description
45	PASS	LVCMOS_O	Pass flag output for @Speed BIST Test operation. PASS = L; BIST failure PASS = H; LOCK = H before BIST can be enabled, then $1x10^{-9}$ error rate achieved across link See Applications Informations section for more details.
LVDS SERIAL INTERFACE PINS			
53	R_{IN+}	LVDS_I	Receiver LVDS True **(+)** Input This input is intended to be terminated with a 100Ω load to the R_{IN+} pin. The interconnect should be AC Coupled to this pin with a 100 nF capacitor.
54	R_{IN-}	LVDS_I	Receiver LVDS Inverted **(–)** Input This input is intended to be terminated with a 100Ω load to the R_{IN-} pin. The interconnect should be AC Coupled to this pin with a 100 nF capacitor.
POWER / GROUND PINS			
51	VDD	VDD	Analog LVDS Voltage Supply, POWER
52	VSS	GND	Analog LVDS GROUND
59	VDD	VDD	Analog Voltage Supply, PLL POWER
58	VSS	GND	Analog Ground, PLL GROUND
57	VDD	VDD	Analog Voltage supply, PLL VCO POWER
56	VSS	GND	Analog Ground, PLL VCO GROUND
32	VDD	VDD	Digital Voltage Supply, LOGIC POWER
31	VSS	GND	Digital Ground, Logic GROUND
46	VDD	VDD	Digital Voltage Supply, LOGIC POWER
47	VSS	GND	Digital Ground, LOGIC GROUND
40	VDD	VDD	Digital Voltage Supply, LVCMOS Output POWER
39	VSS	GND	Digital Ground, LVCMOS Output GROUND
26	VDD	VDD	Digital Voltage Supply, LVCMOS Output POWER
25	VSS	GND	Digital Ground, LVCMOS Output GROUND
11	VDD	VDD	Digital Voltage Supply, LVCMOS Output POWER
12	VSS	GND	Digital Ground, LVCMOS Output GROUND

DS90UR124 Pin Diagram

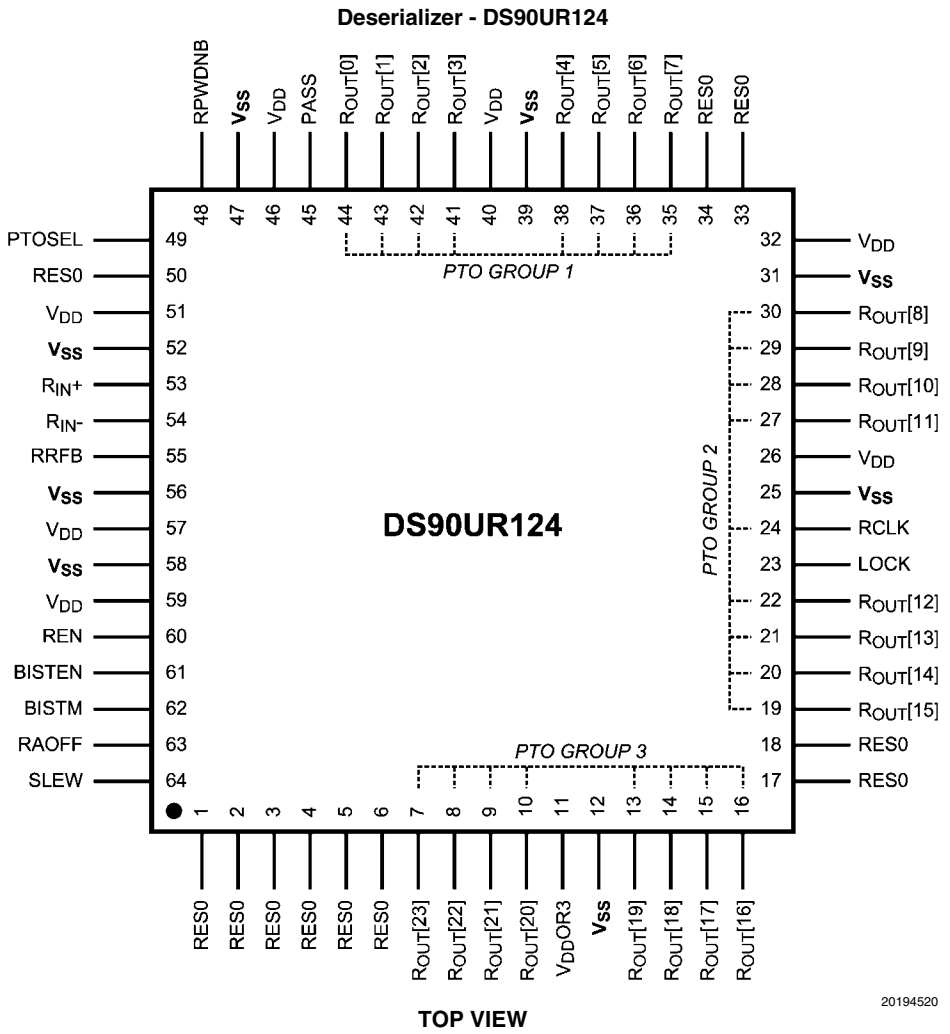

Functional Description

The DS90UR241 Serializer and DS90UR124 Deserializer chipset is an easy-to-use transmitter and receiver pair that sends 24-bits of parallel LVCMOS data over a single serial LVDS link from 120 Mbps to 1.03 Gbps throughput. The DS90UR241 transforms a 24-bit wide parallel LVCMOS data into a single high speed LVDS serial data stream with embedded clock and scrambles / DC Balances the data to enhance signal quality to support AC coupling. The DS90UR124 receives the LVDS serial data stream and converts it back into a 24-bit wide parallel data and recovered clock. The 24-bit Serializer/Deserializer chipset is designed to transmit data up to 10 meters over shielded twisted pair (STP) at clock speeds from 5 MHz to 43MHz.

The Deserializer can attain lock to a data stream without the use of a separate reference clock source; greatly simplifying system complexity and overall cost. The Deserializer synchronizes to the Serializer regardless of data pattern, delivering true automatic "plug and lock" performance. It will lock to the incoming serial stream without the need of special training patterns or sync characters. The Deserializer recovers the clock and data by extracting the embedded clock information and validating data integrity from the incoming data stream and then deserializes the data. The Deserializer monitors the incoming clock information, determines lock status, and asserts the LOCK output high when lock occurs.

In addition the Deserializer also supports an optional @SPEED BIST (Built In Self Test) mode, BIST error flag, and LOCK status reporting pin. Signal quality on the wide parallel output is controlled by the SLEW control and bank slew (PTOSEL) inputs to help reduce noise and system EMI. Each device has a power down control to enable efficient operation in various applications.

INITIALIZATION AND LOCKING MECHANISM

Initialization of the DS90UR241 and DS90UR124 must be established before each device sends or receives data. Initialization refers to synchronizing the Serializer's and Deserializer's PLL's together. After the Serializers locks to the input clock source, the Deserializer synchronizes to the Serializers as the second and final initialization step.

Step 1: When V_{DD} is applied to both Serializer and/or Deserializer, the respective outputs are held in TRI-STATE and internal circuitry is disabled by on-chip power-on circuitry. When V_{DD} reaches V_{DD} OK (~2.2V) the PLL in Serializer begins locking to a clock input. For the Serializer, the local clock is the transmit clock, TCLK. The Serializer outputs are held in TRI-STATE while the PLL locks to the TCLK. After locking to TCLK, the Serializer block is now ready to send data patterns. The Deserializer output will remain in TRI-STATE while its PLL locks to the embedded clock information in serial data stream. Also, the Deserializer LOCK output will remain low until its PLL locks to incoming data and sync-pattern on the RIN± pins.

Step 2: The Deserializer PLL acquires lock to a data stream without requiring the Serializer to send special patterns. The Serializer that is generating the stream to the Deserializer will automatically send random (non-repetitive) data patterns during this step of the Initialization State. The Deserializer will lock onto embedded clock within the specified amount of time. An embedded clock and data recovery (CDR) circuit locks to the incoming bit stream to recover the high-speed receive bit clock and re-time incoming data. The CDR circuit expects a coded input bit stream. In order for the Deserializer to lock to a random data stream from the Serializer, it performs a series of operations to identify the rising clock edge and validates data integrity, then locks to it. Because this locking procedure is independent on the data pattern, total random locking duration may vary. At the point when the Deserializer's CDR locks to the embedded clock, the LOCK pin goes high and valid RCLK/data appears on the outputs. Note that the LOCK signal is synchronous to valid data appearing on the outputs. The Deserializer's LOCK pin is a convenient way to ensure data integrity is achieved on receiver side.

DATA TRANSFER

After Serializer lock is established, the inputs DIN0–DIN23 are used to input data to the Serializer. Data is clocked into the Serializer by the TCLK input. The edge of TCLK used to strobe the data is selectable via the TRFB pin. TRFB high selects the rising edge for clocking data and low selects the falling edge. The Serializer outputs (DOUT±) are intended to drive point-to-point connections.

CLK1, CLK0, DCA, DCB are four overhead bits transmitted along the single LVDS serial data stream (*Figure 19*). The CLK1 bit is always high and the CLK0 bit is always low. The CLK1 and CLK0 bits function as the embedded clock bits in the serial stream. DCB functions as the DC Balance control bit. It does not require any pre-coding of data on transmit side. The DC Balance bit is used to minimize the short and long-term DC bias on the signal lines. This bit operates by selectively sending the data either unmodified or inverted. The DCA bit is used to validate data integrity in the embedded data stream. Both DCA and DCB coding schemes are integrated and automatically performed within Serializer and Deserializer.

The chipset supports clock frequency ranges of 5 MHz to 43 MHz. Every clock cycle, 24 databits are sent along with 4 additional overhead control bits. Thus the line rate is 1.20 Gbps maximum (140Mbps minimum). The link is extremely efficient at 86% (24/28). Twenty five (24 data + 1 clock) plus associated ground signals are reduced to only 1 single LVDS pair providing a compression ratio of better then 25 to 1.

In the serialized data stream, data/embedded clock & control bits (24+4 bits) are transmitted from the Serializer data output (DOUT±) at 28 times the TCLK frequency. For example, if TCLK is 43 MHz, the serial rate is 43 x 28 = 1.20 Giga bits per second. Since only 24 bits are from input data, the serial "payload" rate is 24 times the TCLK frequency. For instance, if TCLK = 43 MHz, the payload data rate is 43 x 24 = 1.03 Gbps. TCLK is provided by the data source and must be in the range of 5 MHz to 43 MHz nominal. The Serializer outputs (DOUT±) can drive a point-to-point connection as shown in *Figure 18*. The outputs transmit data when the enable pin (DEN) is high and TPWDNB is high. The DEN pin may be used to TRI-STATE the outputs when driven low.

When the Deserializer channel attains lock to the input from a Serializer, it drives its LOCK pin high and synchronously delivers valid data and recovered clock on the output. The Deserializer locks onto the embedded clock, uses it to generate multiple internal data strobes, and then drives the recovered clock to the RCLK pin. The recovered clock (RCLK output pin) is synchronous to the data on the ROUT[23:0] pins. While LOCK is high, data on ROUT[23:0] is valid. Otherwise, ROUT[23:0] is invalid. The polarity of the RCLK edge is controlled by the RRFB input. ROUT[23:0], LOCK and RCLK outputs will each drive a maximum of 4 pF load with a 43 MHz clock. REN controls TRI-STATE for ROUTn and the RCLK pin on the Deserializer.

RESYNCHRONIZATION

If the Deserializer loses lock, it will automatically try to re-establish lock. For example, if the embedded clock edge is not detected one time in succession, the PLL loses lock and the LOCK pin is driven low. The Deserializer then enters the operating mode where it tries to lock to a random data stream. It looks for the embedded clock edge, identifies it and then proceeds through the locking process.

The logic state of the LOCK signal indicates whether the data on ROUT is valid; when it is high, the data is valid. The system may monitor the LOCK pin to determine whether data on the ROUT is valid.

POWERDOWN

The Powerdown state is a low power sleep mode that the Serializer and Deserializer may use to reduce power when no data is being transferred. The TPWDNB and RPWDNB are used to set each device into power down mode, which reduces supply current to the µA range. The Serializer enters powerdown when the TPWDNB pin is driven low. In powerdown, the PLL stops and the outputs go into TRI-STATE, disabling load current and reducing current supply. To exit Powerdown, TPWDNB must be driven high. When the Serializer exits Powerdown, its PLL must lock to TCLK before it is ready for the Initialization state. The system must then allow time for Initialization before data transfer can begin. The Deserializer enters powerdown mode when RPWDNB is driven low. In powerdown mode, the PLL stops and the outputs enter TRI-STATE. To bring the Deserializer block out of the powerdown state, the system drives RPWDNB high.

Both the Serializer and Deserializer must reinitialize and relock before data can be transferred. The Deserializer will initialize and assert LOCK high when it is locked to the embedded clock.

TRI-STATE

For the Serializer, TRI-STATE is entered when the DEN or TPWDNB pin is driven low. This will TRI-STATE both driver output pins (DOUT+ and DOUT–). When DEN is driven high, the serializer will return to the previous state as long as all other control pins remain static (TPWDNB, TRFB).

When you drive the REN or RPWDNB pin low, the Deserializer enters TRI-STATE. Consequently, the receiver output pins (ROUT0–ROUT23) and RCLK will enter TRI-STATE. The LOCK output remains active, reflecting the state of the PLL. The Deserializer input pins are high impedance during receiver powerdown (RPWDNB low) and power-off (V_{DD} = 0V).

PRE-EMPHASIS

The DS90UR241 features a Pre-Emphasis function used to compensate for long or lossy transmission media. Cable drive is enhanced with a user selectable Pre-Emphasis feature that provides additional output current during transitions to counteract cable loading effects. The transmission distance will be limited by the loss characteristics and quality of the media. Pre-Emphasis adds extra current during LVDS logic transition to reduce the cable loading effects and increase driving distance. In addition, Pre-Emphasis helps provide faster transitions, increased eye openings, and improved signal integrity. The ability of the DS90UR241 to use the Pre-Emphasis feature will extend the transmission distance up to 10 meters in most cases.

To enable the Pre-Emphasis function, the “PRE” pin requires one external resistor (Rpre) to Vss in order to set the additional current level. Values of Rpre should be between 6kΩ and 100MΩ. Values less than 6kΩ should not be used. A lower input resistor value on the ”PRE” pin increases the magnitude of dynamic current during data transition. The additional source current is based on the following formula: PRE = (R_{PRE} ≥ 6kΩ); I_{MAX} = [48 / R_{PRE}]. For example if Rpre = 15kΩ , then the Pre-Emphasis current is increase by an additional 3.2 mA.

The amount of Pre-Emphasis for a given media will depend on the transmission distance of the application. In general, too much Pre-Emphasis can cause over or undershoot at the receiver input pins. This can result in excessive noise, crosstalk and increased power dissipation. For short cables or distances, Pre-Emphasis may not be required. Signal quality measurements are recommended to determine the proper amount of Pre-Emphasis for each application.

AC-COUPLING AND TERMINATION

The DS90UR241 and DS90UR124 supports AC-coupled interconnects through integrated DC balanced encoding/decoding scheme. To use the Serializer and Deserializer in an AC coupled application, insert external AC coupling capacitors in series in the LVDS signal path as illustrated in *Figure 18*. The Deserializer input stage is designed for AC-coupling by providing a built-in AC bias network which sets the internal V_{CM} to +1.8V. With AC signal coupling, capacitors provide the ac-coupling path to the signal input.

For the high-speed LVDS transmissions, the smallest available package should be used for the AC coupling capacitor. This will help minimize degradation of signal quality due to package parasitics. The most common used capacitor value for the interface is 100 nF (0.1 uF) capacitor. NPO class 1 or X7R class 2 type capacitors are recommended. 50 WVDC should be the minimum used for the best system-level ESD performance.

A termination resistor across DOUT± and RIN± is also required for proper operation to be obtained. The termination resistor should be equal to the differential impedance of the media being driven. This should be in the range of 90 to 132 Ohms. 100 Ohms is a typical value common used with standard 100 Ohm transmission media. This resistor is required for control of reflections and also completes the current loop. It should be placed as close to the Serializer DOUT± outputs and Deserializer RIN± inputs to minimize the stub length from the pins. To match with the deferential impedance on the transmission line, the LVDS I/O are terminated with 100 Ohm resistors on Serializer DOUT± outputs pins and Deserializer RIN± input pins.

Receiver Termination Option 1

A single 100 Ohm termination resistor is placed across the RIN± pins (see *Figure 18*). This provides the signal termination at the Receiver inputs. Other options may be used to increase noise tolerance.

Receiver Termination Option 2

For additional EMI tolerance, two 50 Ohm resistors may be used in place of the single 100 Ohm resistor. A small capacitor is tied from the center point of the 50 Ohm resistors to ground (see *Figure 22*). This provides a high-frequency low impedance path for noise suppression. Value is not critical, 4.7nF maybe used with general applications.

Receiver Termination Option 3

For high noise environments an additional voltage divider network may be connected to the center point. This has the advantage of a providing a DC low-impedance path for noise suppression. Use resistor values in the range of 100Ω-2KΩ

for the pullup and pulldown. Ratio the resistor values to bias the center point at 1.8V. For example (see *Figure 23*): V_{DD}=3.3V, Rpullup=1KΩ, Rpulldown=1.2KΩ; or Rpullup=100Ω, Rpulldown= 120Ω (strongest). The smaller values will consume more bias current, but will provide enhanced noise suppression.

SIGNAL QUALITY ENHANCERS

The DS90UR124 Deserializer supports two signal quality enhancers. The SLEW pin is used to increase the drive strength of the LVCMOS outputs when driving heavy loads. SLEW allows output drive strength for high or low current drive. Default setting is LOW for low drive at 2 mA and HIGH for high drive at 4 mA.

There are two types of Progressive Turn-On modes (Fixed and PTO Frequency Spread) to help reduce EMI, simultaneous switching noise, and system ground bounce. The PTOSEL pin introduces bank skew in the data/clock outputs to limit the number of outputs switching simultaneously. For Fixed-PTO mode, the Deserializer ROUT[23:0] outputs are grouped into three groups of eight, with each group switching about 2 or 1 UI apart in phase from RCLK for Group 1 and Groups 2, 3 respectively (see *Figure 15*). In the PTO Frequency Spread mode, ROUT[23:0] are also grouped into three groups of eight, with each group is separated out of phase with the adjacent groups (see *Figure 16*) per every 4 cycles. Note that in the PTO Frequency Spread operating mode RCLK is also spreading and separated by 1 UI.

@SPEED-BIST TEST FEATURE

To assist vendors with test verification, the DS90UR241/DS90UR124 is equipped with built-in self-test (BIST) capability to support both system manufacturing and field diagnostics. BIST mode is intended to check the entire high-speed serial link at full link-speed, without the use of specialized and expensive test equipment. This feature provides a simple method for a system host to perform diagnostic testing of both Serializer and Deserializer. The BIST function is easily configured through the 2 control pins on the DS90UR124. When the BIST mode is activated, the Serializer has the ability to transfer an internally generated PRBS data pattern. This pattern traverses across interconnecting links to the Deserializer. The DS90UR124 includes an on-chip PRBS pattern verification circuit that checks the data pattern for bit errors and reports any errors on the data output pins on the Deserializer.

The @SPEED-BIST feature uses 2 signal pins (BISTEN and BISTM) on the DS90UR124 Deserializer. The BISTEN and BISTM pins together determine the functions of the BIST mode. The BISTEN signal (HIGH) activates the test feature on the Deserializer. After the BIST mode is enabled, all the data input channels DIN[23:0] on the DS90UR241 Serializer must be set logic LOW or floating in order for Deserializer to start accepting data. An input clock signal (TCLK) for the Serializer must also be applied during the entire BIST operation. The BISTM pin selects error reporting status mode of the BIST function. When BIST is configured in the error status mode (BISTM = LOW), each of the ROUT[23:0] outputs will correspond to bit errors on a cycle-by-cycle basis. The result of bit mismatches are indicated on the respective parallel inputs on the ROUT[23:0] data output pins. In the BIST error-count accumulator mode (BISTM = HIGH), an 8-bit counter on ROUT[7:0] is used to represent the number of errors detected (0 to 255 max). The successful completion of the BIST test is reported on the PASS pin on the Deserializer. The Deserializer's PLL must first be locked to ensure the PASS status is valid. The PASS status pin will stay LOW and then transition to HIGH once a BER of $1x10^{-9}$ is achieved across the transmission link.

BACKWARDS COMPATIBLE MODE WITH DS90C241 AND DS90C124

The RAOFF pin allows a backward compatible mode with DS90C241/DS90C124 devices. To interface with either DS90C241 Serializer or DS90C124 Deserializer, the RAOFF pin on DS90UR241 or DS90UR124 must be tied HIGH to disable the additional LSFR coding. For normal operation directly with DS90UR241 to DS90UR124, RAOFF pins are set LOW. See *Table 1* and *Table 2* for more details.

Applications Information

USING THE DS90UR241 AND DS90UR124

The DS90UR241/DS90UR124 Serializer/Deserializer (SERDES) pair sends 24 bits of parallel LVCMOS data over a serial LVDS link up to 1.03 Gbps. Serialization of the input data is accomplished using an on-board PLL at the Serializer which embeds clock with the data. The Deserializer extracts the clock/control information from the incoming data stream and deserializes the data. The Deserializer monitors the incoming clock information to determine lock status and will indicate lock by asserting the LOCK output high.

DISPLAY APPLICATION

The DS90UR241/124 chipset is intended for interface between a host (graphics processor) and a Display. It supports an 18-bit color depth (RGB666) and up to 1280 X 480 display formats. In a RGB666 configuration 18 color bits (R[5:0], G [5:0], B[5:0]), Pixel Clock (PCLK) and three control bits (VS, HS and DE) along with three spare bits are supported across the serial link with PCLK rates from 5 to 43 MHz.

TYPICAL APPLICATION CONNECTION

Figure 20 shows a typical application of the DS90UR241 Serializer (SER). The LVDS outputs utilize a 100 ohm termination and 100nF coupling capacitors to the line. Bypass capacitors are placed near the power supply pins. At a minimum, three 0.1uF capacitors should be used for local bypassing. A system GPO (General Purpose Output) controls the TPWDNB pin. In this application the TRFB pin is tied High to latch data on the rising edge of the TCLK. The DEN signal is not used and is tied High also. The application is to the companion Deserializer (DS90UR124) so the RAOFF pin is tied low to scramble the data and improve link signal quality. In this application the link is typical, therefore the VODSEL pin is tied Low for the standard LVDS swing. The pre-emphasis input utilizes a resistor to ground to set the amount of pre-emphasis desired by the application.

Figure 21 shows a typical application of the DS90UR124 Deserializer (DES). The LVDS inputs utilize a 100 ohm termination and 100nF coupling capacitors to the line. Bypass capacitors are placed near the power supply pins. At a minimum, four 0.1uF capacitors should be used for local bypassing. A system GPO (General Purpose Output) controls the RPWDNB pin. In this application the RRFB pin is tied High to strobe the data on the rising edge of the RCLK. The REN signal is not used and is tied High also. The application is to the companion Serializer (DS90UR241) so the RAOFF pin is tied low to descramble the data. Output (LVCMOS) signal quality is set by the SLEW pin, and the PTOSEL pin can be used to reduce simultaneous output switching by introducing a small amount of delay between output banks.

POWER CONSIDERATIONS

An all LVCMOS design of the Serializer and Deserializer makes them inherently low power devices. Additionally, the constant current source nature of the LVDS outputs minimize the slope of the speed vs. I_{DD} curve of LVCMOS designs.

NOISE MARGIN

The Deserializer noise margin is the amount of input jitter (phase noise) that the Deserializer can tolerate and still reliably recover data. Various environmental and systematic factors include:

Serializer: V_{DD} noise, TCLK jitter (noise bandwidth and out-of-band noise)

Media: ISI, V_{CM} noise

Deserializer: V_{DD} noise

For a graphical representation of noise margin, please see *Figure 17*.

TRANSMISSION MEDIA

The Serializer and Deserializer are to be used in point-to-point configuration, through a PCB trace, or through twisted pair cable. In a point-to-point configuration, the transmission media needs be terminated at both ends of the transmitter and receiver pair. Interconnect for LVDS typically has a differential impedance of 100 Ohms. Use cables and connectors that have matched differential impedance to minimize impedance discontinuities. In most applications that involve cables, the transmission distance will be determined on data rates involved, acceptable bit error rate and transmission medium.

LIVE LINK INSERTION

The Serializer and Deserializer devices support live pluggable applications. The automatic receiver lock to random data “plug & go” hot insertion capability allows the DS90UR124 to attain lock to the active data stream during a live insertion event.

PCB LAYOUT AND POWER SYSTEM CONSIDERATIONS

Circuit board layout and stack-up for the LVDS SERDES devices should be designed to provide low-noise power feed to the device. Good layout practice will also separate high frequency or high-level inputs and outputs to minimize unwanted stray noise pickup, feedback and interference. Power system performance may be greatly improved by using thin dielectrics (2 to 4 mils) for power / ground sandwiches. This arrangement provides plane capacitance for the PCB power system with low-inductance parasitics, which has proven especially effective at high frequencies, and makes the value and placement of external bypass capacitors less critical. External bypass capacitors should include both RF ceramic and tantalum electrolytic types. RF capacitors may use values in the range of 0.01 uF to 0.1 uF. Tantalum capacitors may be in the 2.2 uF to 10 uF range. Voltage rating of the tantalum capacitors should be at least 5X the power supply voltage being used.

Surface mount capacitors are recommended due to their smaller parasitics. When using multiple capacitors per supply pin, locate the smaller value closer to the pin. A large bulk capacitor is recommend at the point of power entry. This is typically in the 50uF to 100uF range and will smooth low frequency switching noise. It is recommended to connect power and ground pins directly to the power and ground planes with bypass capacitors connected to the plane with via on both ends of the capacitor. Connecting power or ground pins to an external bypass capacitor will increase the inductance of the path.

A small body size X7R chip capacitor, such as 0603, is recommended for external bypass. Its small body size reduces the parasitic inductance of the capacitor. The user must pay attention to the resonance frequency of these external bypass capacitors, usually in the range of 20-30 MHz range. To provide effective bypassing, multiple capacitors are often used to achieve low impedance between the supply rails over the frequency of interest. At high frequency, it is also a common practice to use two vias from power and ground pins to the planes, reducing the impedance at high frequency.

Some devices provide separate power and ground pins for different portions of the circuit. This is done to isolate switching noise effects between different sections of the circuit. Separate planes on the PCB are typically not required. Pin Description tables typically provide guidance on which circuit blocks are connected to which power pin pairs. In some cases, an external filter many be used to provide clean power to sensitive circuits such as PLLs.

Use at least a four layer board with a power and ground plane. Locate LVCMOS signals away from the LVDS lines to prevent coupling from the LVCMOS lines to the LVDS lines. Closely-coupled differential lines of 100 Ohms are typically recommended for LVDS interconnect. The closely coupled lines help to ensure that coupled noise will appear as common-mode and thus is rejected by the receivers. The tightly coupled lines will also radiate less.

Termination of the LVDS interconnect is required. For point-to-point applications, termination should be located at both ends of the devices. Nominal value is 100 Ohms to match the line’s differential impedance. Place the resistor as close to the transmitter DOUT± outputs and receiver RIN± inputs as possible to minimize the resulting stub between the termination resistor and device.

LVDS INTERCONNECT GUIDELINES

See AN-1108 and AN-905 for full details.

- Use 100Ω coupled differential pairs
- Use the S/2S/3S rule in spacings
  —S = space between the pair
  —2S = space between pairs
  —3S = space to LVCMOS signal
- Minimize the number of Vias
- Use differential connectors when operating above 500Mbps line speed
- Maintain balance of the traces
- Minimize skew within the pair
- Terminate as close to the TX outputs and RX inputs as possible

Additional general guidance can be found in the LVDS Owner’s Manual - available in PDF format from the National web site at: **www.national.com/lvds**

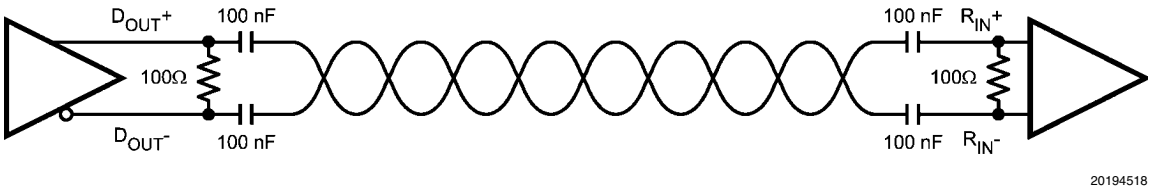

FIGURE 18. AC Coupled Application

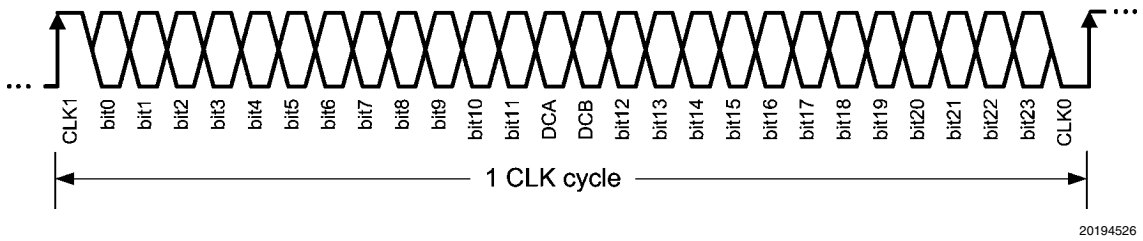

*Note: bits [0-23] are not physically located in positions shown above since bits [0-23] are scrambled and DC Balanced

FIGURE 19. Single Serialized LVDS Bitstream*

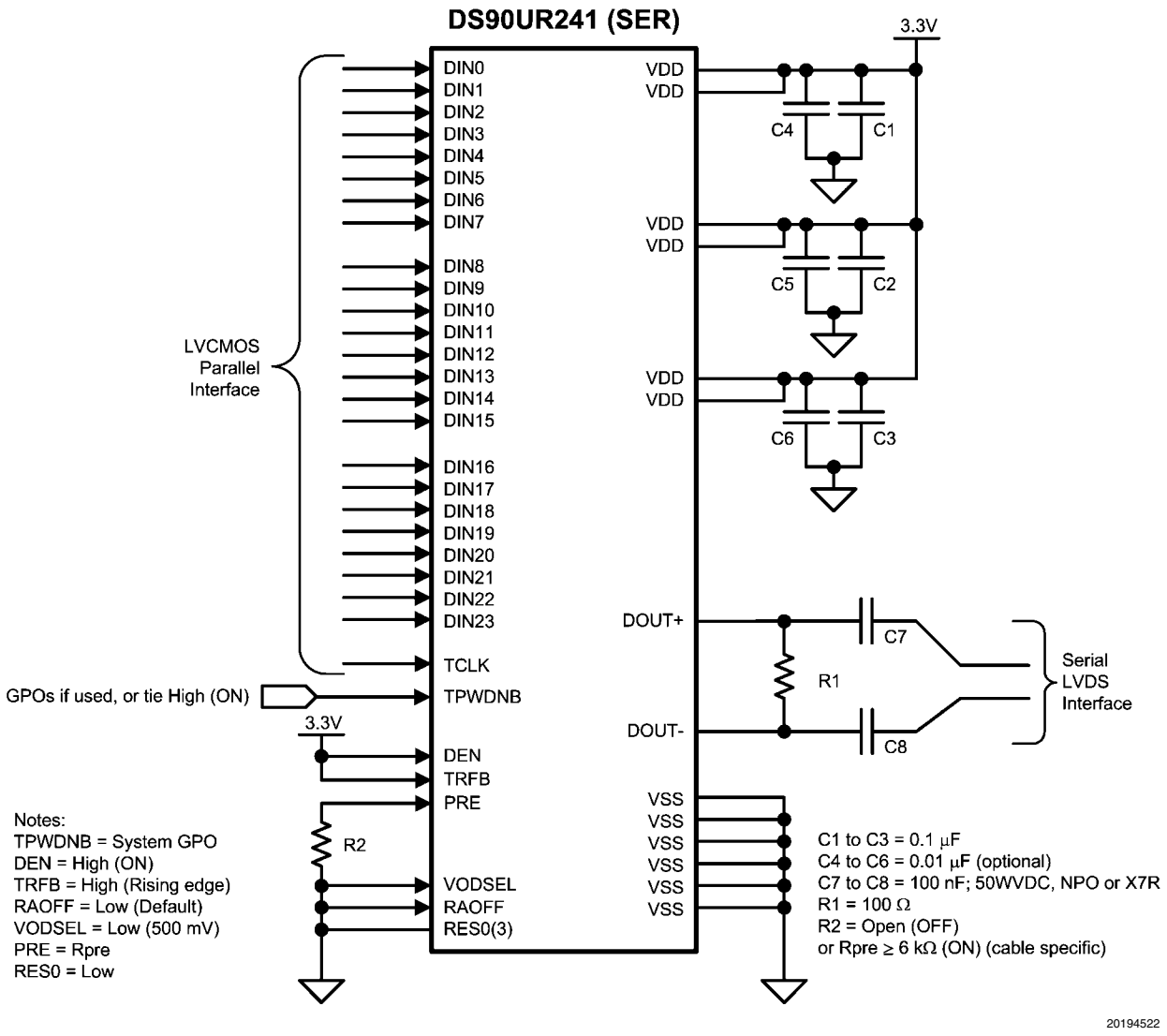

FIGURE 20. DS90UR241 Typical Application Connection

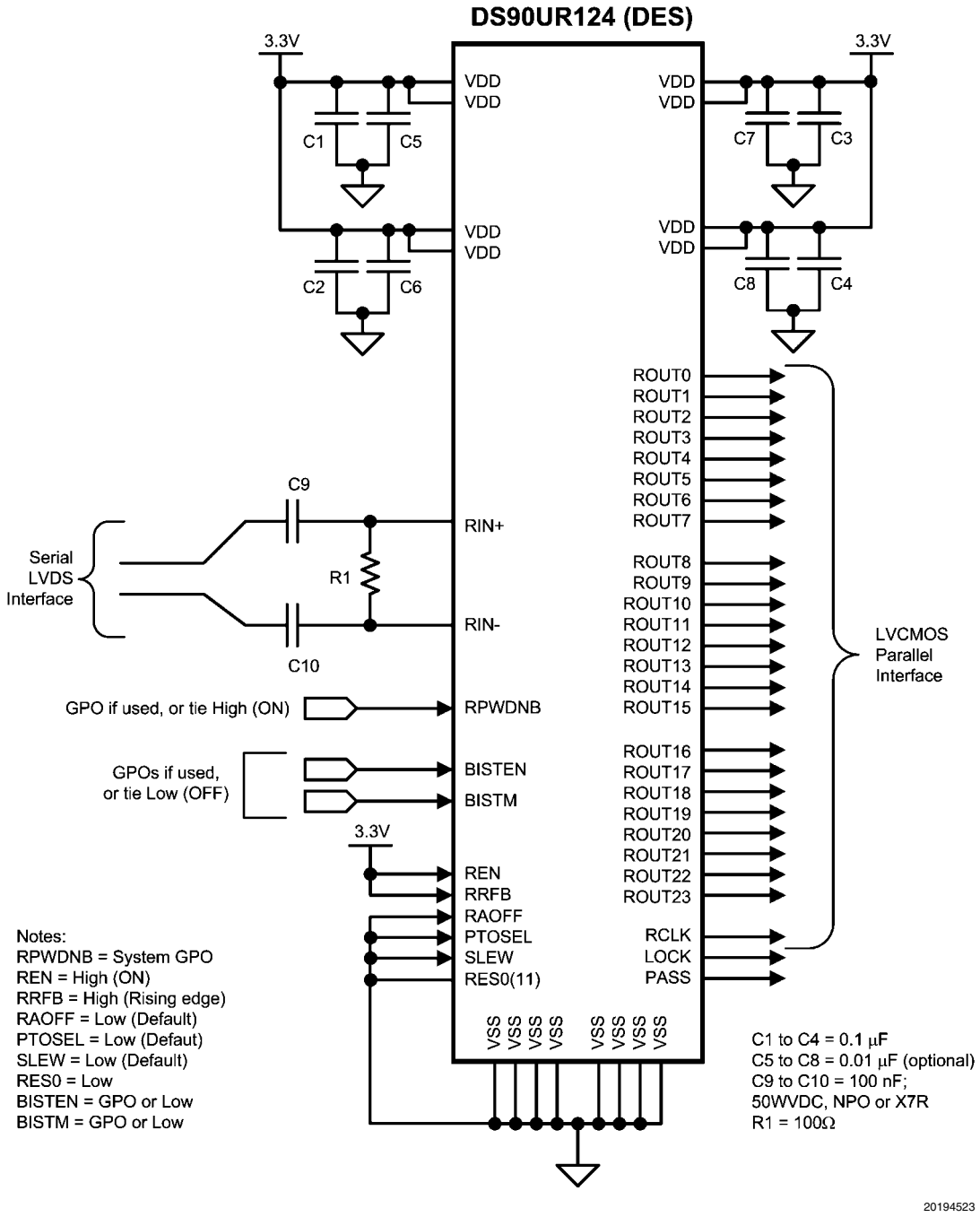

FIGURE 21. DS90UR124 Typical Application Connection

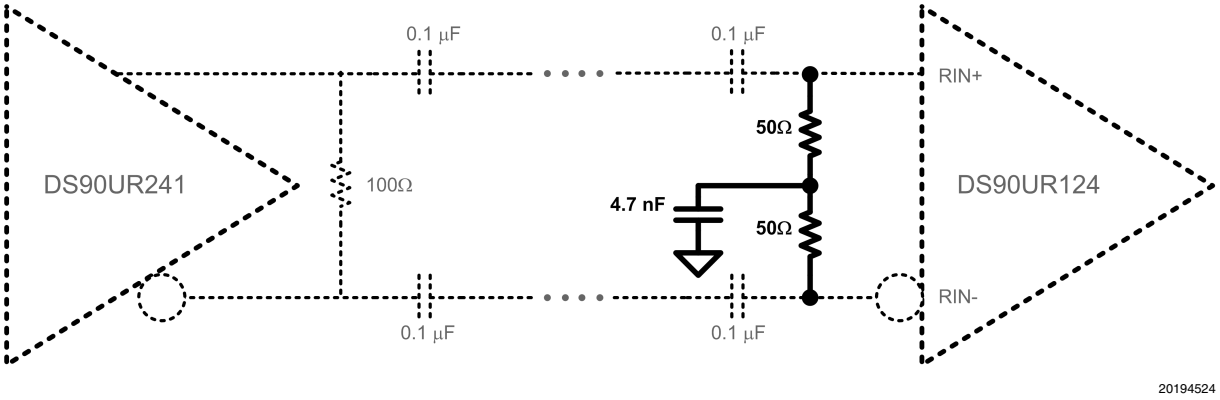

FIGURE 22. Receiver Termination Option 2

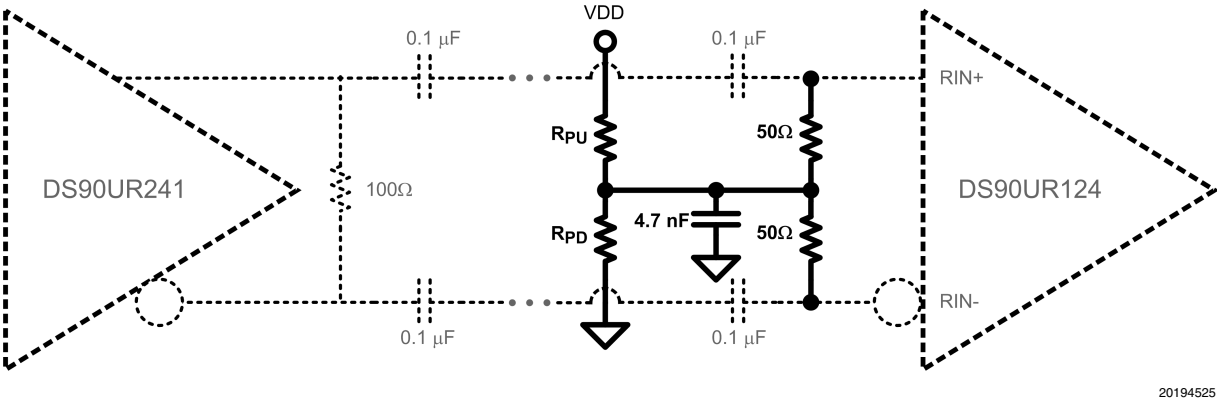

FIGURE 23. Receiver Termination Option 3

Truth Tables

TABLE 1. DS90UR241 Serializer Truth Table

TPWDNB (Pin 9)	DEN (Pin 18)	RAOFF (Pin 12)	Tx PLL Status (Internal)	LVDS Outputs (Pins 19 and 20)
L	X	X	X	Hi Z
H	L	X	X	Hi Z
H	H	X	Not Locked	Hi Z
H	H	L	Locked	Serialized Data with Embedded Clock (DS90**UR**124 compatible)
H	H	H	Locked	Serialized Data with Embedded Clock (DS90**C**124 compatible)

TABLE 2. DS90UR124 Deserializer Truth Table

RPWDNB (Pin 48)	REN (Pin 60)	RAOFF (Pin 63)	Rx PLL Status (Internal)	ROUTn and RCLK (See Pin Diagram)	LOCK (Pin 23)
L	X	X	X	Hi Z	Hi Z
H	L	X	X	Hi Z	L = PLL Unocked; H = PLL Locked
H	H	X	Not Locked	Hi Z	L
H	H	L	Locked	Data and RCLK Active (DS90**UR**241 compatible)	H
H	H	H	Locked	Data and RCLK Active (DS90**C**241 compatible)	H

Physical Dimensions inches (millimeters) unless otherwise noted

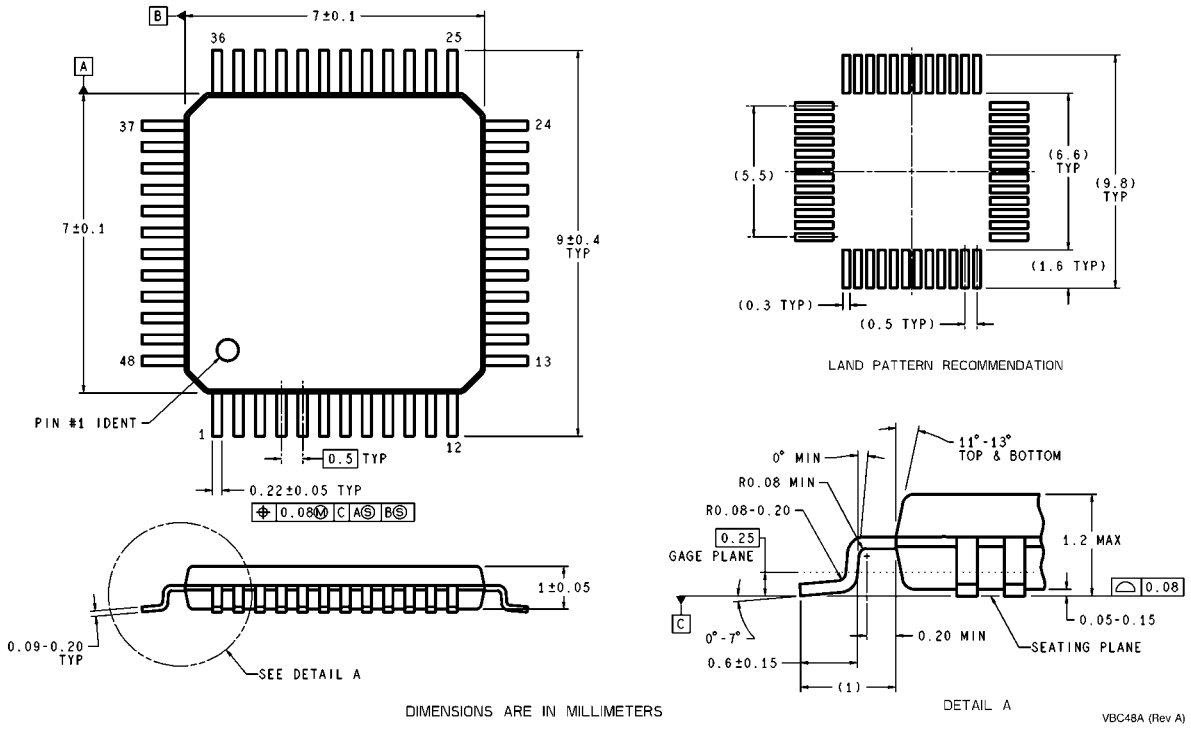

Dimensions show in millimeters only
NS Package Number VBC48A

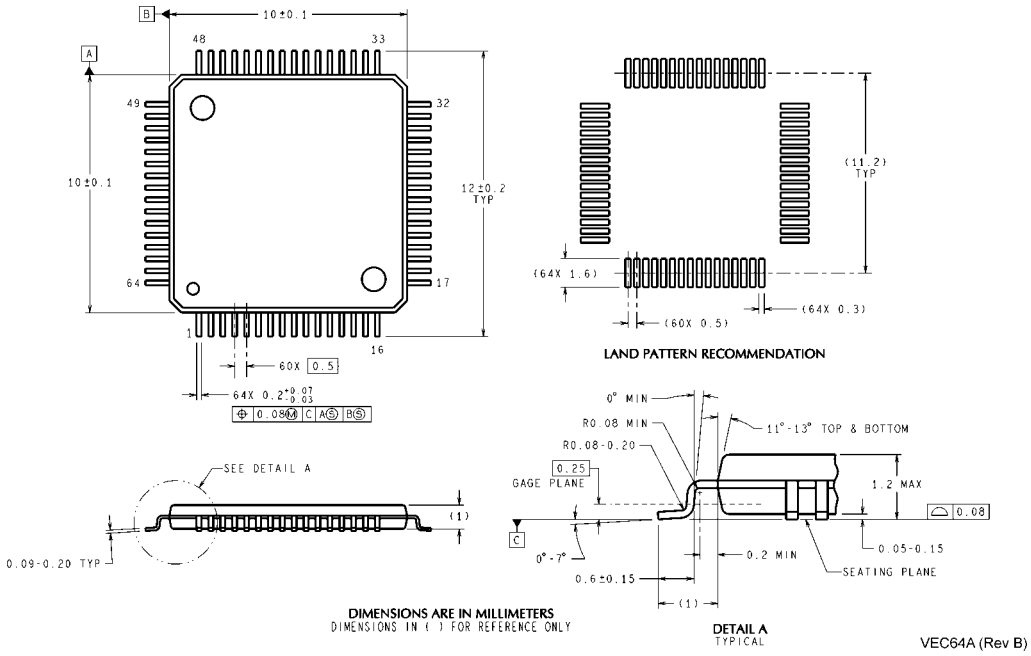

Dimensions show in millimeters only
NS Package Number VEC64A

Ordering Information

NSID	Package Type	Package ID
DS90UR241QVS	48-Lead TQFP style, 7.0 X 7.0 X 1.0 mm, 0.5 mm pitch	VBC48A
DS90UR241QVSX	48-Lead TQFP style, 7.0 X 7.0 X 1.0 mm, 0.5 mm pitch, 1000 std reel	VBC48A
DS90UR241IVS	48-Lead TQFP style, 7.0 X 7.0 X 1.0 mm, 0.5 mm pitch	VBC48A
DS90UR241IVSX	48-Lead TQFP style, 7.0 X 7.0 X 1.0 mm, 0.5 mm pitch, 1000 std reel	VBC48A
DS90UR124QVS	64-Lead TQFP style, 10.0 X 10.0 X 1.0 mm, 0.5 mm pitch	VEC64A
DS90UR124QVSX	64-Lead TQFP style, 10.0 X 10.0 X 1.0 mm, 0.5 mm pitch, 1000 std reel	VEC64A
DS90UR124IVS	64-Lead TQFP style, 10.0 X 10.0 X 1.0 mm, 0.5 mm pitch	VEC64A
DS90UR124IVSX	64-Lead TQFP style, 10.0 X 10.0 X 1.0 mm, 0.5 mm pitch, 1000 std reel	VEC64A

Notes

Notes

For more National Semiconductor product information and proven design tools, visit the following Web sites at:

Products		Design Support	
Amplifiers	www.national.com/amplifiers	WEBENCH	www.national.com/webench
Audio	www.national.com/audio	Analog University	www.national.com/AU
Clock Conditioners	www.national.com/timing	App Notes	www.national.com/appnotes
Data Converters	www.national.com/adc	Distributors	www.national.com/contacts
Displays	www.national.com/displays	Green Compliance	www.national.com/quality/green
Ethernet	www.national.com/ethernet	Packaging	www.national.com/packaging
Interface	www.national.com/interface	Quality and Reliability	www.national.com/quality
LVDS	www.national.com/lvds	Reference Designs	www.national.com/refdesigns
Power Management	www.national.com/power	Feedback	www.national.com/feedback
Switching Regulators	www.national.com/switchers		
LDOs	www.national.com/ldo		
LED Lighting	www.national.com/led		
PowerWise	www.national.com/powerwise		
Serial Digital Interface (SDI)	www.national.com/sdi		
Temperature Sensors	www.national.com/tempsensors		
Wireless (PLL/VCO)	www.national.com/wireless		

THE CONTENTS OF THIS DOCUMENT ARE PROVIDED IN CONNECTION WITH NATIONAL SEMICONDUCTOR CORPORATION ("NATIONAL") PRODUCTS. NATIONAL MAKES NO REPRESENTATIONS OR WARRANTIES WITH RESPECT TO THE ACCURACY OR COMPLETENESS OF THE CONTENTS OF THIS PUBLICATION AND RESERVES THE RIGHT TO MAKE CHANGES TO SPECIFICATIONS AND PRODUCT DESCRIPTIONS AT ANY TIME WITHOUT NOTICE. NO LICENSE, WHETHER EXPRESS, IMPLIED, ARISING BY ESTOPPEL OR OTHERWISE, TO ANY INTELLECTUAL PROPERTY RIGHTS IS GRANTED BY THIS DOCUMENT.

TESTING AND OTHER QUALITY CONTROLS ARE USED TO THE EXTENT NATIONAL DEEMS NECESSARY TO SUPPORT NATIONAL'S PRODUCT WARRANTY. EXCEPT WHERE MANDATED BY GOVERNMENT REQUIREMENTS, TESTING OF ALL PARAMETERS OF EACH PRODUCT IS NOT NECESSARILY PERFORMED. NATIONAL ASSUMES NO LIABILITY FOR APPLICATIONS ASSISTANCE OR BUYER PRODUCT DESIGN. BUYERS ARE RESPONSIBLE FOR THEIR PRODUCTS AND APPLICATIONS USING NATIONAL COMPONENTS. PRIOR TO USING OR DISTRIBUTING ANY PRODUCTS THAT INCLUDE NATIONAL COMPONENTS, BUYERS SHOULD PROVIDE ADEQUATE DESIGN, TESTING AND OPERATING SAFEGUARDS.

EXCEPT AS PROVIDED IN NATIONAL'S TERMS AND CONDITIONS OF SALE FOR SUCH PRODUCTS, NATIONAL ASSUMES NO LIABILITY WHATSOEVER, AND NATIONAL DISCLAIMS ANY EXPRESS OR IMPLIED WARRANTY RELATING TO THE SALE AND/OR USE OF NATIONAL PRODUCTS INCLUDING LIABILITY OR WARRANTIES RELATING TO FITNESS FOR A PARTICULAR PURPOSE, MERCHANTABILITY, OR INFRINGEMENT OF ANY PATENT, COPYRIGHT OR OTHER INTELLECTUAL PROPERTY RIGHT.

LIFE SUPPORT POLICY

NATIONAL'S PRODUCTS ARE NOT AUTHORIZED FOR USE AS CRITICAL COMPONENTS IN LIFE SUPPORT DEVICES OR SYSTEMS WITHOUT THE EXPRESS PRIOR WRITTEN APPROVAL OF THE CHIEF EXECUTIVE OFFICER AND GENERAL COUNSEL OF NATIONAL SEMICONDUCTOR CORPORATION. As used herein:

Life support devices or systems are devices which (a) are intended for surgical implant into the body, or (b) support or sustain life and whose failure to perform when properly used in accordance with instructions for use provided in the labeling can be reasonably expected to result in a significant injury to the user. A critical component is any component in a life support device or system whose failure to perform can be reasonably expected to cause the failure of the life support device or system or to affect its safety or effectiveness.

National Semiconductor and the National Semiconductor logo are registered trademarks of National Semiconductor Corporation. All other brand or product names may be trademarks or registered trademarks of their respective holders.

Copyright© 2008 National Semiconductor Corporation

For the most current product information visit us at www.national.com

National Semiconductor Americas Technical Support Center
Email: new.feedback@nsc.com
Tel: 1-800-272-9959

National Semiconductor Europe Technical Support Center
Email: europe.support@nsc.com
German Tel: +49 (0) 180 5010 771
English Tel: +44 (0) 870 850 4288

National Semiconductor Asia Pacific Technical Support Center
Email: ap.support@nsc.com

National Semiconductor Japan Technical Support Center
Email: jpn.feedback@nsc.com