Panasonic

DRC5124T0L

Silicon NPN epitaxial planar type

For digital circuits
Complementary to DRA5124T
DRC2124T in SMini3 type package

■ Features

- High forward current transfer ratio hFE with excellent linearity
- Low collector-emitter saturation voltage Vce(sat)
- Halogen-free / RoHS compliant
  (EU RoHS / UL-94 V-0 / MSL:Level 1 compliant)

■ Marking Symbol: NH

■ Packaging

Embossed type (Thermo-compression sealing) : 3 000 pcs / reel (standard)

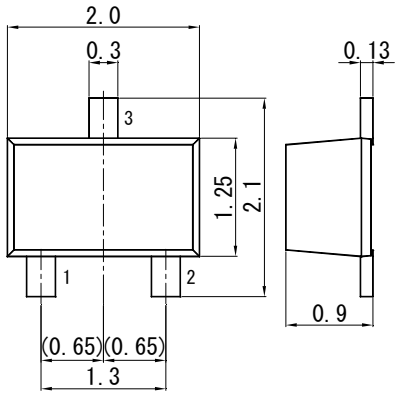

1. Base
2. Emitter
3. Collector

Panasonic	SMini3-F2-B
JEITA	SC-85
Code	—

■ Absolute Maximum Ratings Ta = 25 °C

Parameter	Symbol	Rating	Unit
Collector-base voltage (Emitter open)	VCBO	50	V
Collector-emitter voltage (Base open)	VCEO	50	V
Collector current	IC	100	mA
Total power dissipation	PT	150	mW
Junction temperature	Tj	150	°C
Operating ambient temperature	Topr	-40 to +85	°C
Storage temperature	Tstg	-55 to +150	°C

Internal Connection

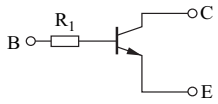

Resistance value	R1	22	kΩ

■ Electrical Characteristics Ta = 25 °C ± 3 °C

Parameter	Symbol	Conditions	Min	Typ	Max	Unit
Collector-base voltage (Emitter open)	VCBO	IC = 10 μA, IE = 0	50			V
Collector-emitter voltage (Base open)	VCEO	IC = 2 mA, IB = 0	50			V
Collector-base cutoff current (Emitter open)	ICBO	VCB = 50 V, IE = 0			0.1	μA
Collector-emitter cutoff current (Base open)	ICEO	VCE = 50 V, IB = 0			0.5	μA
Emitter-base cutoff current (Collector open)	IEBO	VEB = 6 V, IC = 0			0.01	mA
Forward current transfer ratio	hFE	VCE = 10 V, IC = 5 mA	160		460	-
Collector-emitter saturation voltage	VCE(sat)	IC = 10 mA, IB = 0.5 mA			0.25	V
Input voltage	Vi(on)	VCE = 0.2 V, IC = 5 mA	1.8			V
	Vi(off)	VCE = 5 V, IC = 100 μA			0.4	V
Input resistance	R1		-30%	22	+30%	kΩ

Note) 1. Measuring methods are based on JAPANESE INDUSTRIAL STANDARD JIS C 7030 Measuring methods for transistors.

Established : 2009-10-15
Revised : 2014-03-18

Technical Data (reference)

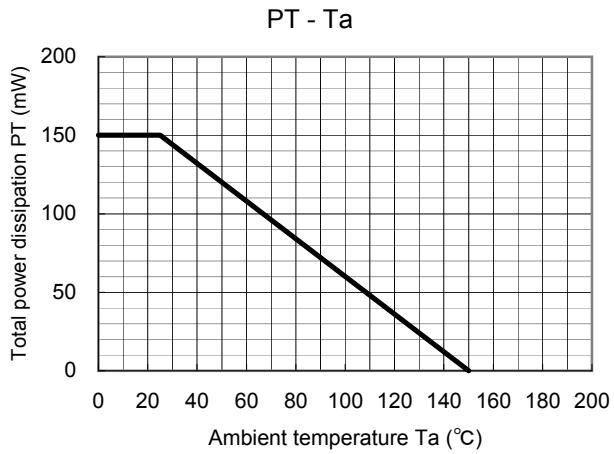

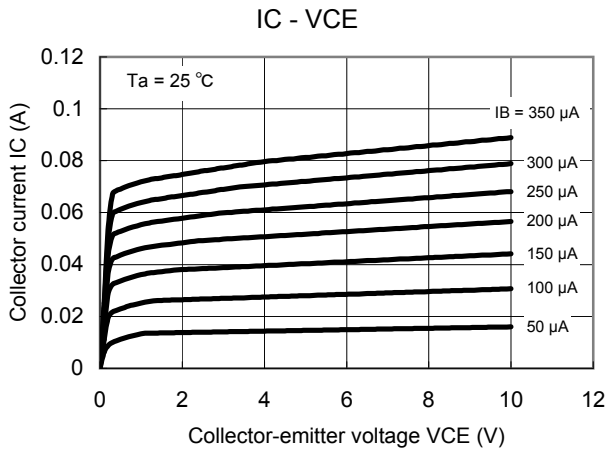

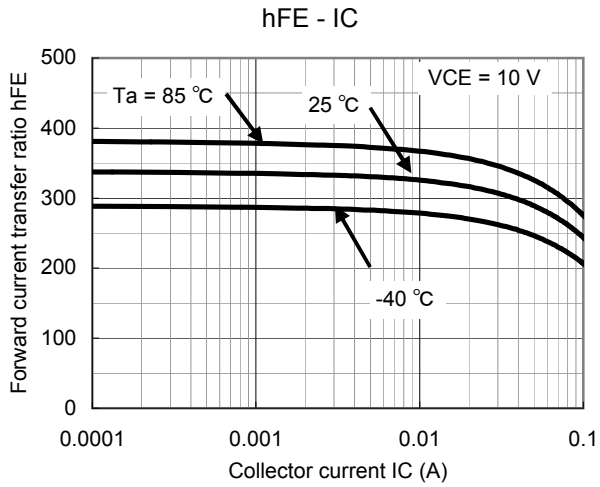

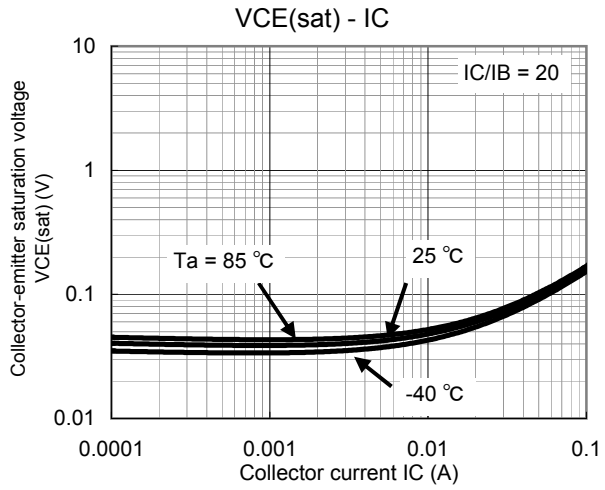

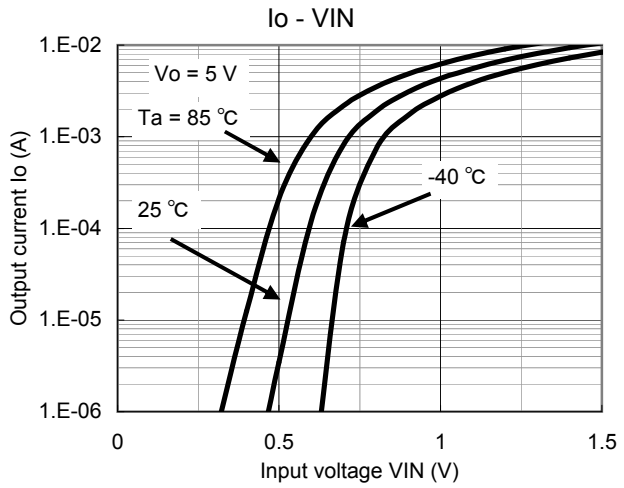

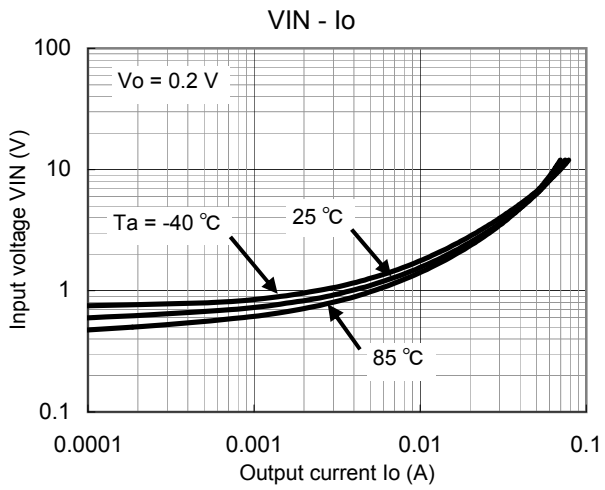

Established : 2009-10-15
Revised : 2014-03-18

SMini3-F2-B

Unit: mm

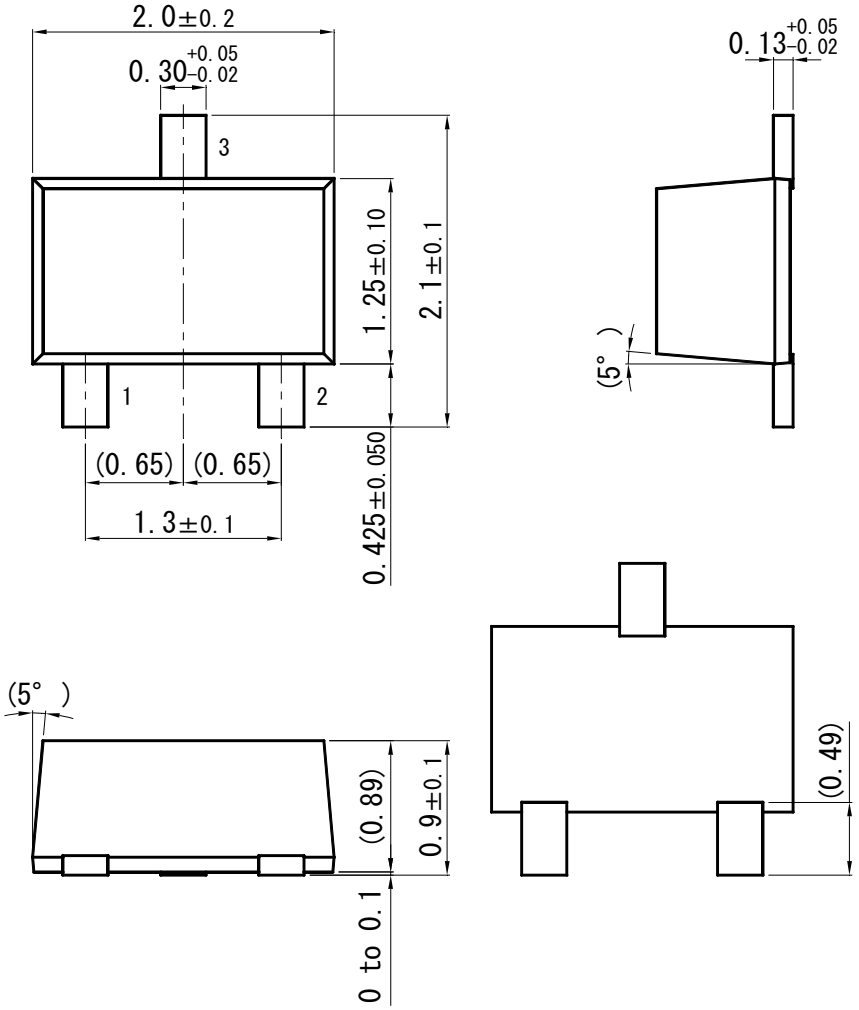

■ Land Pattern (Reference) (Unit: mm)

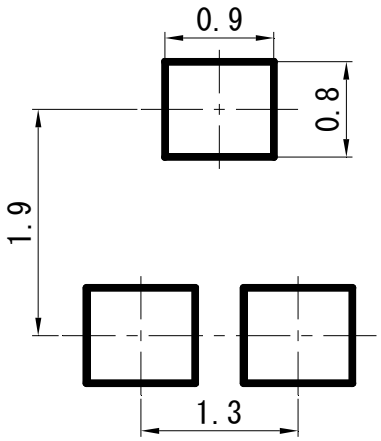

Established : 2009-10-15
Revised : 2014-03-18

Request for your special attention and precautions in using the technical information and semiconductors described in this book

(1) If any of the products or technical information described in this book is to be exported or provided to non-residents, the laws and regulations of the exporting country, especially, those with regard to security export control, must be observed.

(2) The technical information described in this book is intended only to show the main characteristics and application circuit examples of the products. No license is granted in and to any intellectual property right or other right owned by Panasonic Corporation or any other company. Therefore, no responsibility is assumed by our company as to the infringement upon any such right owned by any other company which may arise as a result of the use of technical information described in this book.

(3) The products described in this book are intended to be used for general applications (such as office equipment, communications equipment, measuring instruments and household appliances), or for specific applications as expressly stated in this book.
Consult our sales staff in advance for information on the following applications:
・Special applications (such as for airplanes, aerospace, automotive equipment, traffic signaling equipment, combustion equipment, life support systems and safety devices) in which exceptional quality and reliability are required, or if the failure or malfunction of the products may directly jeopardize life or harm the human body.
It is to be understood that our company shall not be held responsible for any damage incurred as a result of or in connection with your using the products described in this book for any special application, unless our company agrees to your using the products in this book for any special application.

(4) The products and product specifications described in this book are subject to change without notice for modification and/or improvement. At the final stage of your design, purchasing, or use of the products, therefore, ask for the most up-to-date Product Standards in advance to make sure that the latest specifications satisfy your requirements.

(5) When designing your equipment, comply with the range of absolute maximum rating and the guaranteed operating conditions (operating power supply voltage and operating environment etc.). Especially, please be careful not to exceed the range of absolute maximum rating on the transient state, such as power-on, power-off and mode-switching. Otherwise, we will not be liable for any defect which may arise later in your equipment.
Even when the products are used within the guaranteed values, take into the consideration of incidence of break down and failure mode, possible to occur to semiconductor products. Measures on the systems such as redundant design, arresting the spread of fire or preventing glitch are recommended in order to prevent physical injury, fire, social damages, for example, by using the products.

(6) Comply with the instructions for use in order to prevent breakdown and characteristics change due to external factors (ESD, EOS, thermal stress and mechanical stress) at the time of handling, mounting or at customer's process. When using products for which damp-proof packing is required, satisfy the conditions, such as shelf life and the elapsed time since first opening the packages.

(7) This book may be not reprinted or reproduced whether wholly or partially, without the prior written permission of our company.

20100202