SONY

CXA1821M

RF Amplifier for CD Players

Description

The CXA1821M is an IC developed for compact disc players. This IC incorporates an APC circuit and RF, focus error, and tracking error amplifiers for 3-spot optical pickup output. (The voltage-converted optical pickup output is supported.)

20 pin SOP (Plastic)

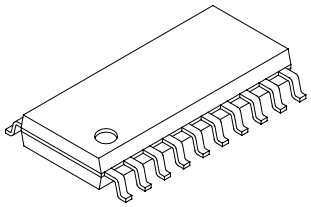

Features

- Low power consumption (40 mW at ±2.5 V)
- APC circuit
- Both single power supply (+5 V) and dual power supply (±2.5 V) operations possible.
- Compatible with pickup for LC and PD
- Supports the RF amplifier at double speed.

Applications

Compact disc players

Structure

Bipolar silicon monolithic IC

Absolute Maximum Ratings (Ta=25°C)

• Supply voltage	V_{CC}	12	V
• Operating temperature	Topr	–20 to +75	°C
• Storage temperature	Tstg	–65 to +150	°C
• Allowable power dissipation	P_D	600	mW

Operating Conditions

• Supply voltage	$V_{CC} – V_{EE}$	2.8 to 11.0	V

Block Diagram and Pin Configuration

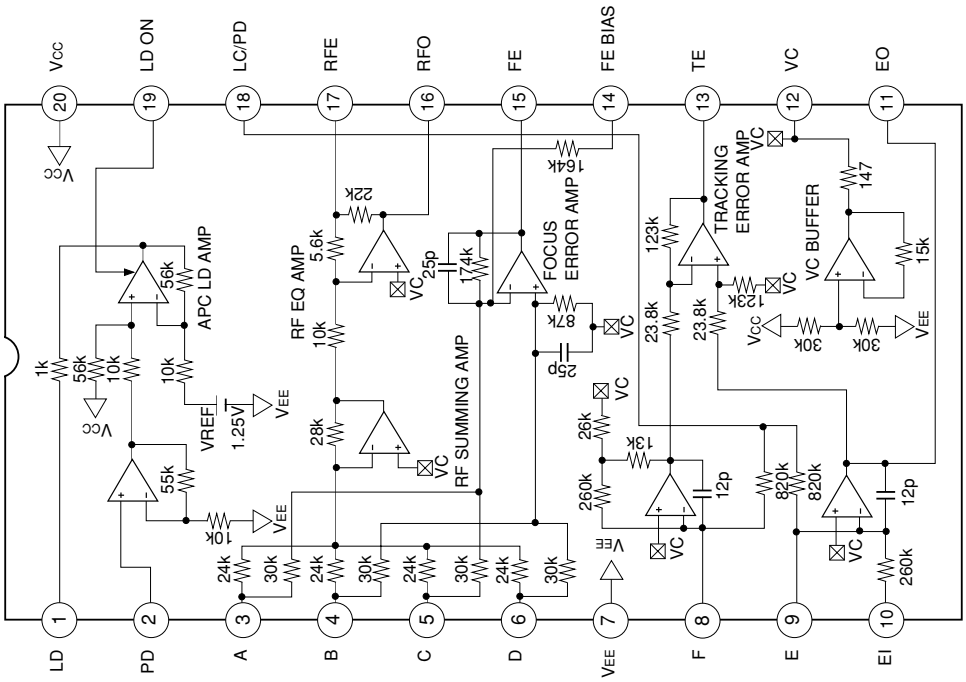

Sony reserves the right to change products and specifications without prior notice. This information does not convey any license by any implication or otherwise under any patents or other right. Application circuits shown, if any, are typical examples illustrating the operation of the devices. Sony cannot assume responsibility for any problems arising out of the use of these circuits.

E94932A1Y-TE

Pin Description

Pin No.	Symbol	I/O	Equivalent circuit	Description
1	LD	O	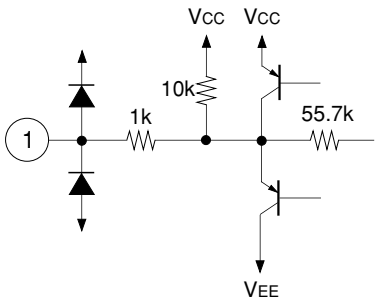	Output pin of APC amplifier.
2	PD	I	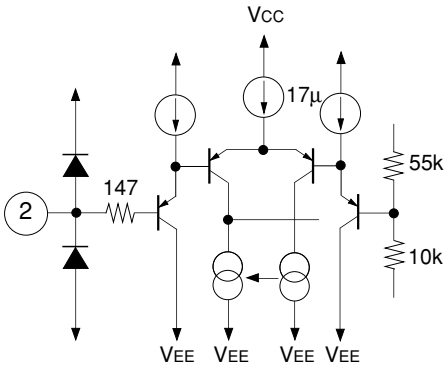	Input pin of APC amplifier.
3 4 5 6 14	A B C D FE BIAS	I I I I I	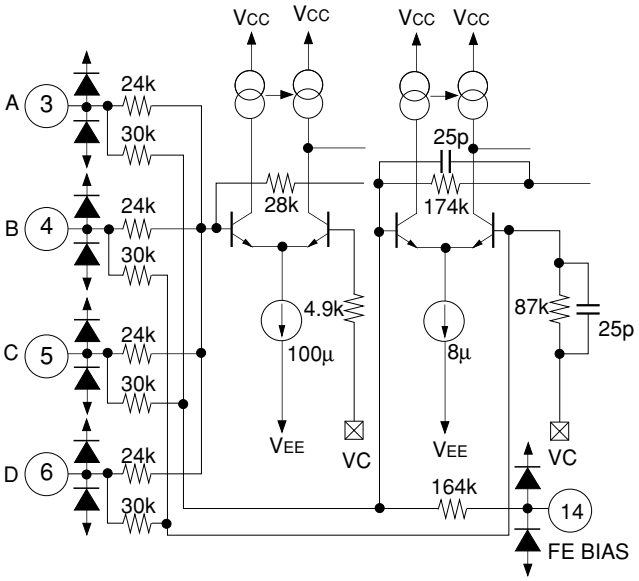	Input pin of RF and FE amplifier for Pins 3, 4, 5 and 6; focus bias adjustment for Pin 14.
7	VEE	—		VEE.

Pin No.	Symbol	I/O	Equivalent circuit	Description
8 9 10 11 18	F E EI EO LC/PD	I I — — I	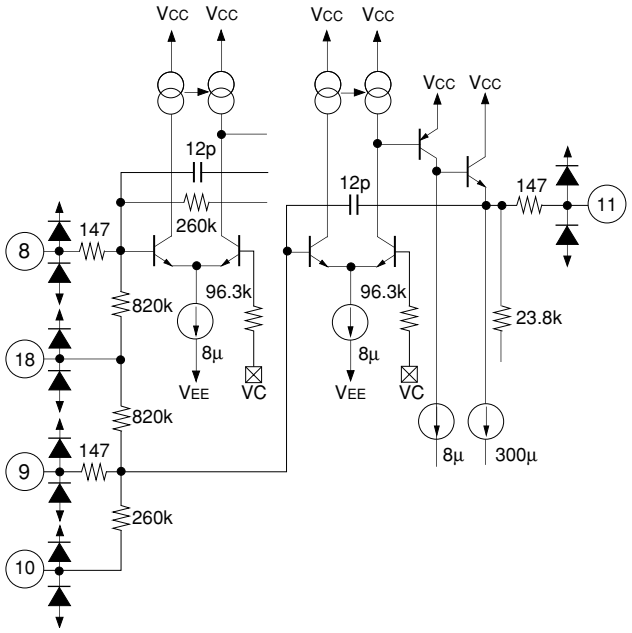	Input pin of tracking error amplifier for Pins 8 and 9. An external resistor for V-I conversion should be connected because these pins are for current input. Gain adjustment of input signal from Pin 9 for Pins 10 and 11. Pin 18 is a bias for LC when connected to VCC and for PD IC when left open.
12	VC	O	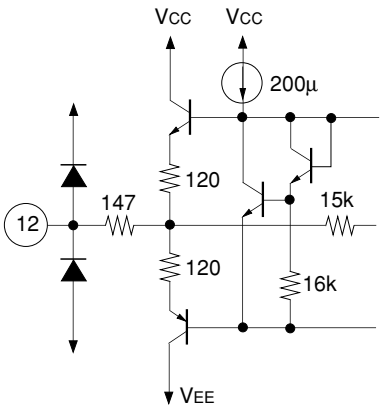	DC voltage output pin of (VCC+VEE)/2. Connect to GND when dual power supply (±2.5 V) is used; connect a smoothing capacitor when single power supply (+5 V) is used.
13	TE	O	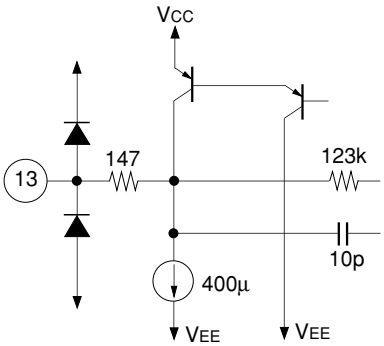	Output pin of tracking error amplifier. The F-E signal is output.

Pin No.	Symbol	I/O	Equivalent circuit	Description
15	FE	O	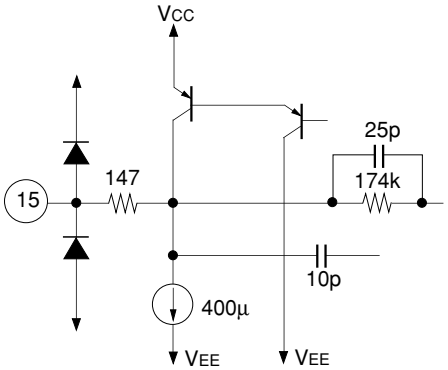	Output pin of focus error amplifier.
16	RFO	O	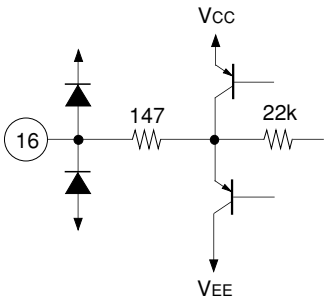	Output pin of RF amplifier.
17	RFE	—	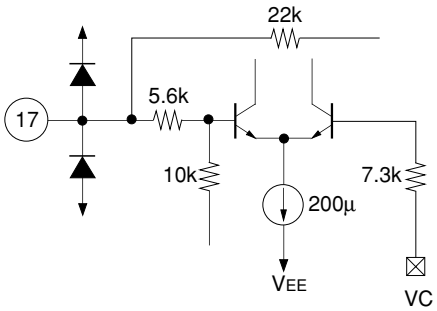	Equalizing pin is used of RF amplifier. Frequency response can be adjusted by connecting CR to this pin.
19	LD ON	I	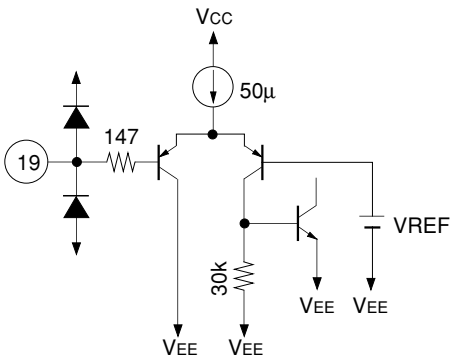	ON/OFF selection pin of APC amplifier. ON for VCC and OFF for VEE
20	VCC	—		VCC.

Electrical Characteristics

Power supply ±2.5 V (V_{CC}=2.5 V, V_{EE}=–2.5 V, VC=GND)

Measurement No.		Measurement item	Symbol	SW conditions 1	2	3	4	5	6	7	8	9	Bias conditions E1	E2	E3	Measurement pin	Description of I/O waveform and measurement method		Min.	Typ.	Max.	Unit
1		Current consumption	I_{CC}													20	Input GND		—	7.23	11.0	mA
2			I_{EE}													7	Input GND		–11.0	–7.23	—	
3	RF amplifier	Offset voltage 1	V_{16-1}													16	Input GND	Output DC measurement	–25.0	—	25.0	mV
5		Voltage gain	V_{16-2}	○	○	○	○									16	Input 1kHz 100 mVp-p	Output AC measurement	19.2	22.1	25.2	dB
6		Maximum output amplitude H	V_{16-3}	○	○	○	○			○			280mV			16		Output DC measurement	1.3	—	—	V
7		Maximum output amplitude L	V_{16-4}	○	○	○	○			○			–280mV			16		Output DC measurement	—	—	–0.3	
8	FE amplifier	Offset voltage	V_{15-1}													15	Input GND	Output DC measurement	–30.0	0	30.0	mV
9		Voltage gain 1	V_{15-2}	○		○										15	Input 1kHz 260 mVp-p	Output AC measurement	18.3	21.2	24.3	dB
10		Voltage gain 2	V_{15-3}		○		○									15	Input 1kHz 260 mVp-p	Output AC measurement	18.3	21.2	24.3	
11		Voltage gain difference	V_{15-4}													15	$V_{15-4}=V_{15-2}-V_{15-3}$		–3.0	0	3.0	
12		Maximum output amplitude L	V_{15-5}	○		○				○			310mV			15		Output DC measurement		—	–1.9	V
13		Maximum output amplitude H	V_{15-6}		○		○			○			310mV			15		Output DC measurement	1.9	—		
14	TE amplifier	Offset voltage	V_{13-1}													13	Input GND	Output DC measurement	–30	0	30	mV
15		Voltage gain 1	V_{13-2}					○								13	Input 1kHz 140 mVp-p	Output AC measurement	19.8	22.7	25.8	dB
16		Voltage gain 2	V_{13-3}						○							13	Input 1kHz 140 mVp-p	Output AC measurement	19.8	22.7	25.8	
17		Voltage gain difference	V_{13-4}													13	$V_{13-4}=V_{13-2}-V_{13-3}$		–3.0	0	3.0	
18		Maximum output amplitude H	V_{13-5}					○		○			270mV			13		Output DC measurement	1.9	—	—	V
19		Maximum output amplitude L	V_{13-6}						○	○			270mV			13		Output DC measurement	—	—	–1.9	
20	APC	Output voltage 1	V_{1-1}											2.0V	+69mV	1		Output DC measurement	—	–1.7	–0.3	
21		Output voltage 2	V_{1-2}											2.0V	+123mV	1		Output DC measurement	–1.5	0.0	1.1	
22		Output voltage 3	V_{1-3}											2.0V	+177mV	1		Output DC measurement	0.6	2.0	—	
23		Output voltage 4	V_{1-4}											0.5V	+0mV	1	LD OFF	Output DC measurement	2.1	2.3	—	
24		Maximum output amplitude	V_{1-5}								○			2.0V	+0mV	1	I_1=0.8mA	Output DC measurement	—	—	0.0	
25	Center amplifier	Output voltage 1	V_{12-1}													12		Output DC measurement	–100	—	+100	mV

* ○ in the SW conditions represents the ON state.

Electrical Characteristics Measurement Circuit

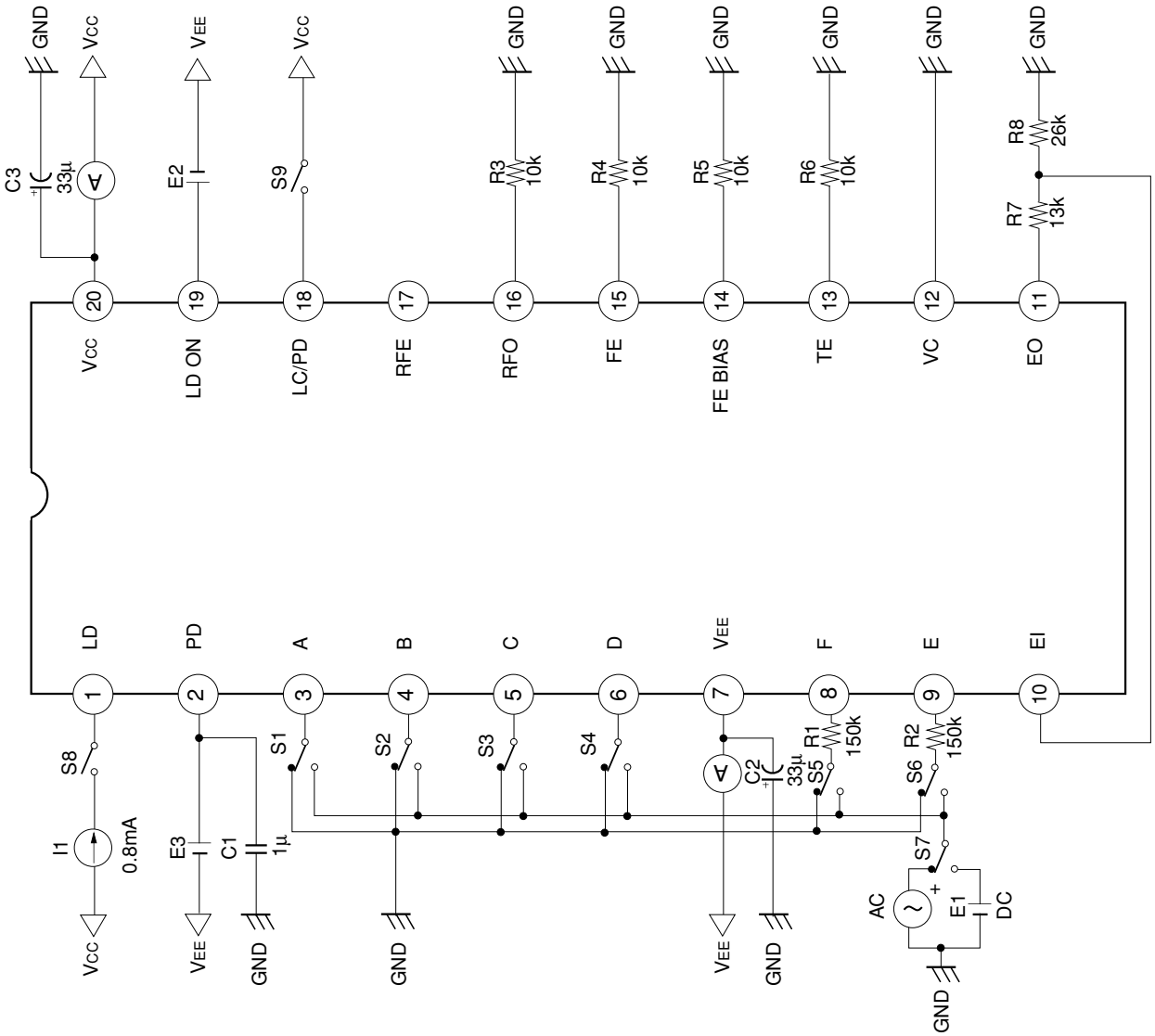

Description of Functions

RF Amplifier

Each signal current from the photodiodes A, B, C and D is I-V converted, and input to Pins 3, 4, 5 and 6. These signals are added by the RF summing amplifier and equalized by the RF equalizing amplifier and then output to Pin 16. When the RF signal is equalized, an equalizing circuit is added to Pin 17.

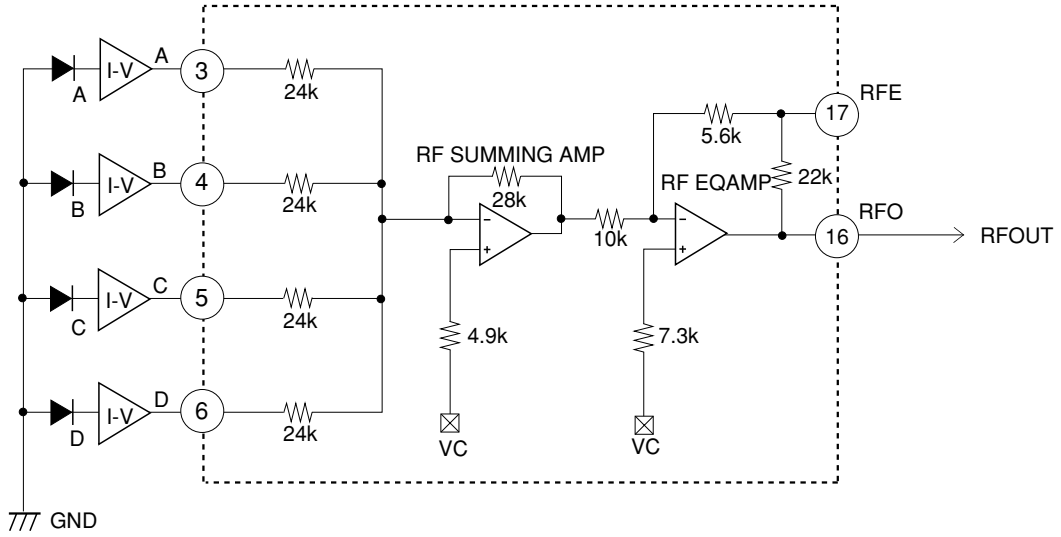

Focus Error Amplifier

The operation of (B+D)–(A+C) is performed and the signal is output to Pin 15. Pin 14 is used for bias adjustment of the focus error signal.

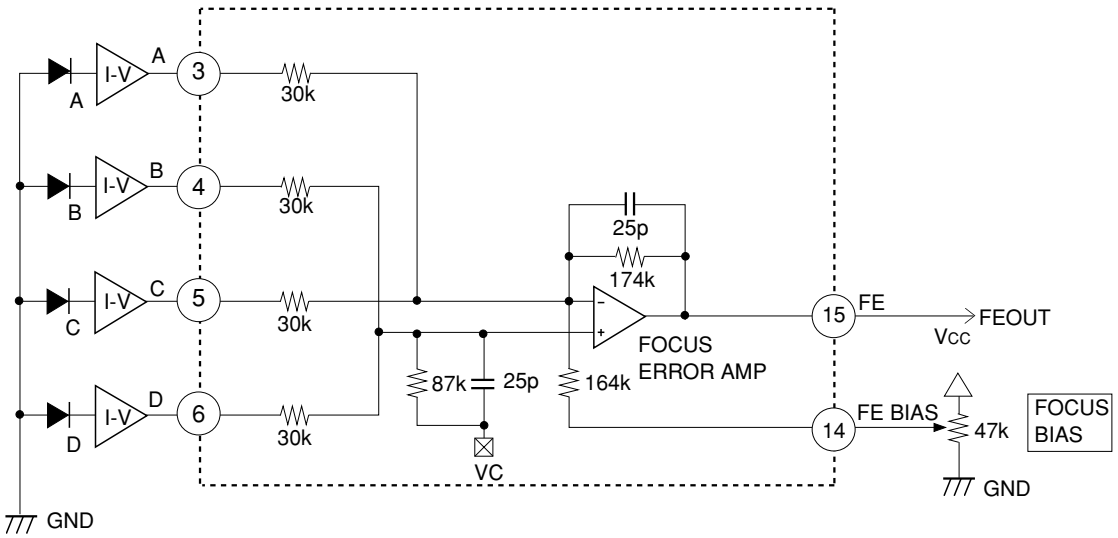

Tracking Error Amplifier

Each signal current from the photodiodes E and F is I-V converted and input to Pins 8 and 9 via an input resistor which determines the gain. The signal is amplified by the gain amplifier, operated by the tracking error amplifier and then the (F-E) signal is output to Pin 13.

The E input gain can be adjusted by Pin 11.

Pin 18 can be used as a bias for LC when connected to VCC and as a bias for PD IC when left open.

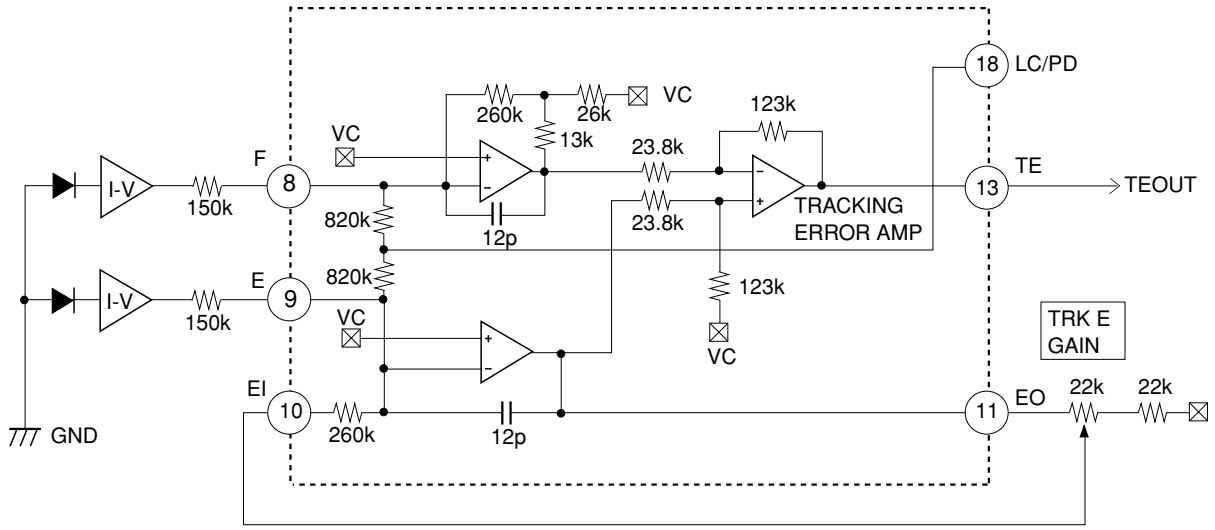

APC Circuit

When the laser diode is driven with constant current, the optical output possesses large negative temperature characteristics. Therefore, the current must be controlled with the monitor photodiode to ensure the output remains constant. This constitutes the APC circuit. When LD ON pin is connected to VCC, APC is ON; connected to VEE, it is OFF.

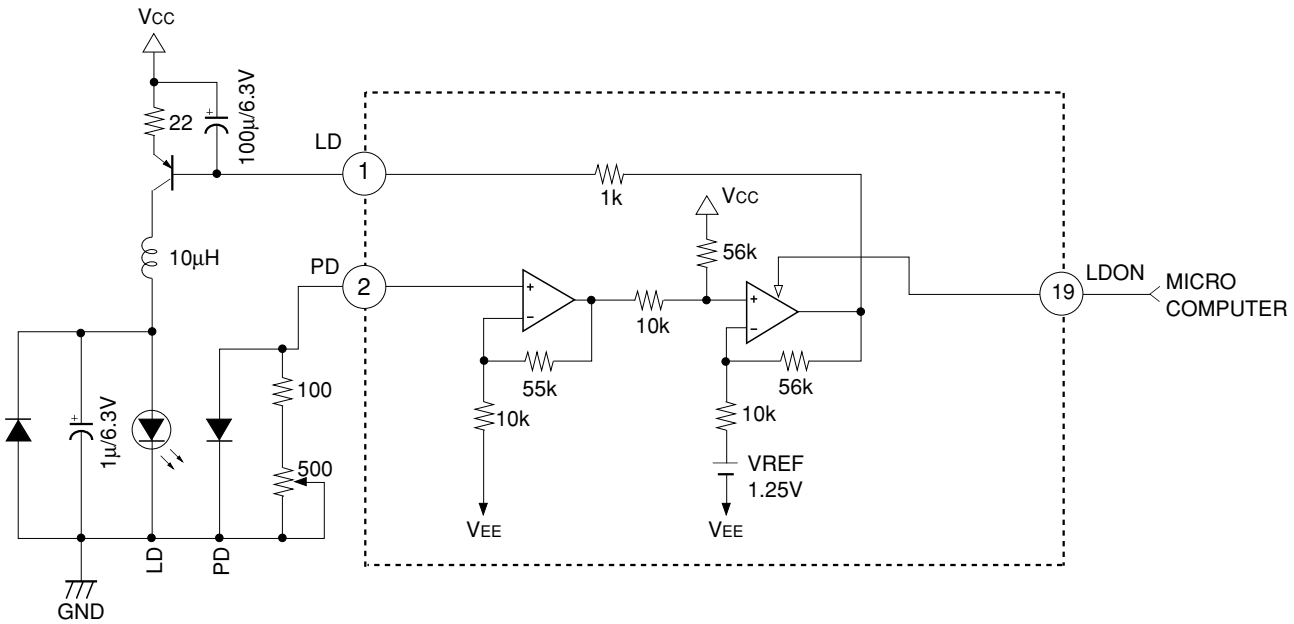

Center Voltage Generation Circuit

This circuit provides the center potential when this IC is used at single power supply. The maximum current is approximately ±3 mA. The output impedance is approximately 147Ω. Connect this circuit to GND when used at dual power supply.

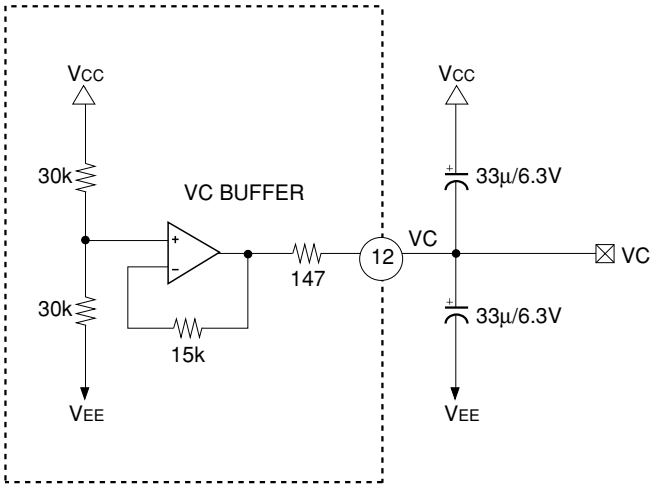

Notes on Operation

Power supply

The CXA1821M can be used either at dual power supply or single power supply. The table below shows the connection of power supply for each case.

	VCC	VEE	VC
Dual power supply	+power supply	–power supply	GND
Single power supply	Power supply	GND	OPEN

Application Circuit

• For single power supply +5 V

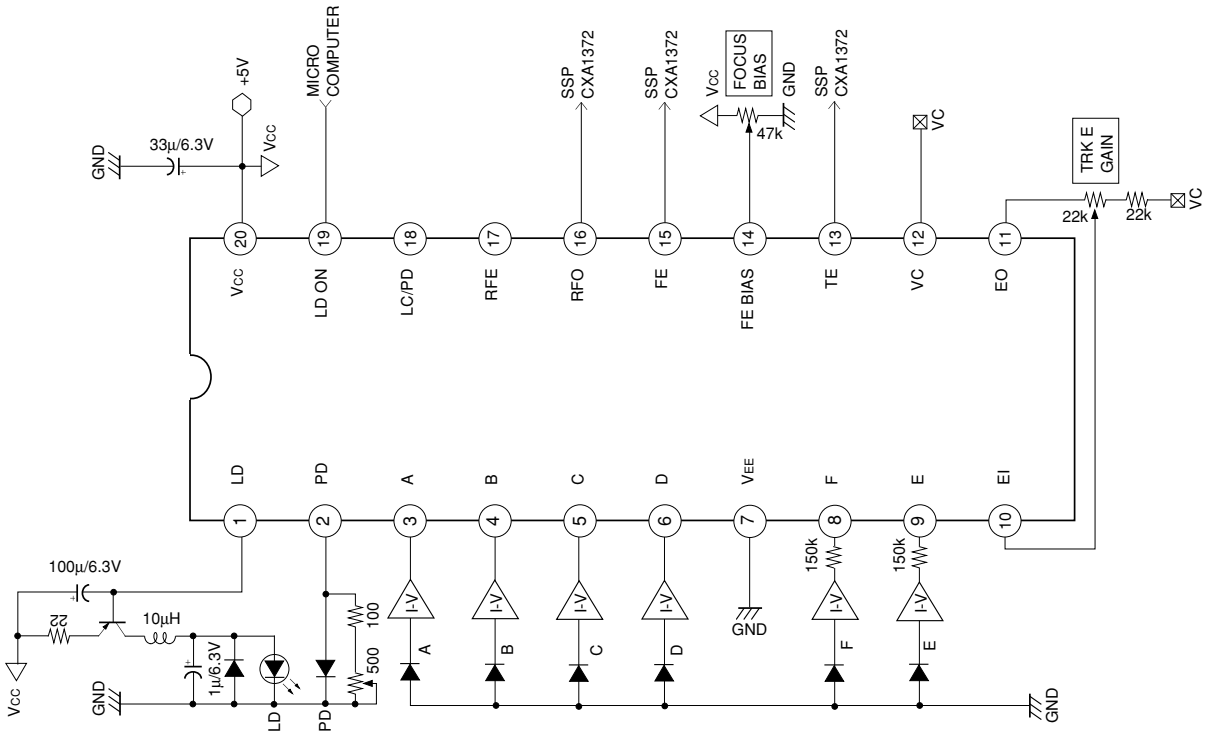

* Connect Pin 18 to VCC when LC is used.

• For dual power supply ±2.5 V

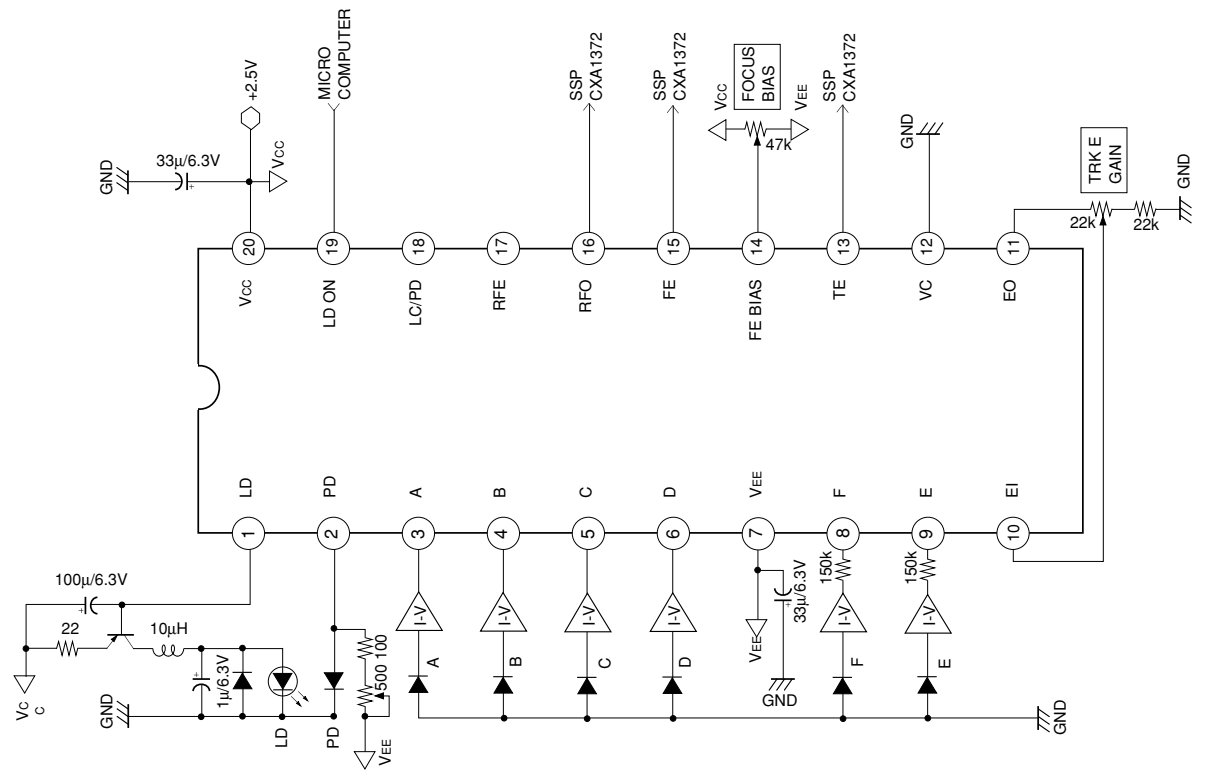

* Connect Pin 18 to VCC when LC is used.

Application circuits shown are typical examples illustrating the operation of the devices. Sony cannot assume responsibility for any problems arising out of the use of these circuits or for any infringement of third party and other right due to same.

Example of Representative Characteristics

Current consumption characteristics

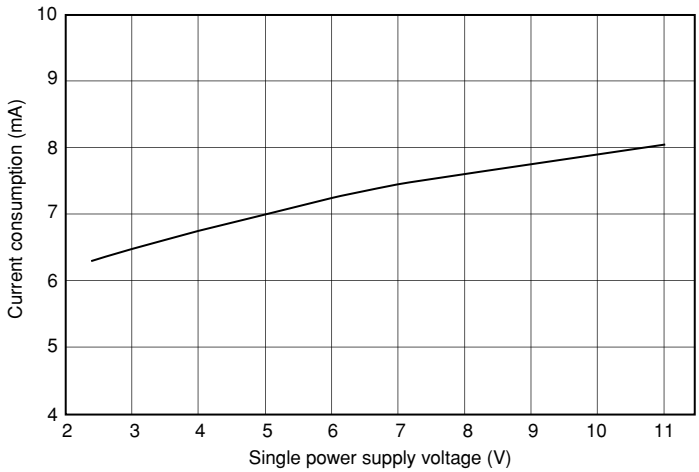

RF amplifier frequency characteristics

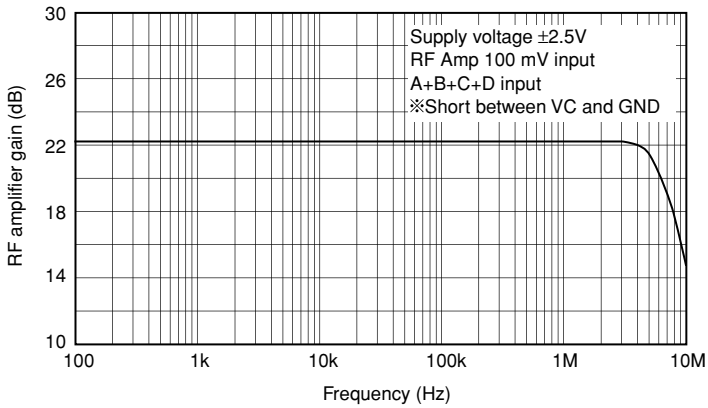

FE amplifier frequency characteristics
(Frequency response comparison for A+C input and B+D input)

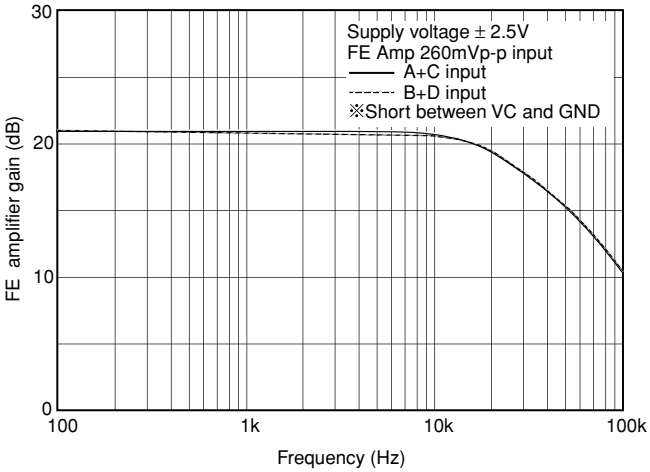

FE amplifier frequency errer characteristics

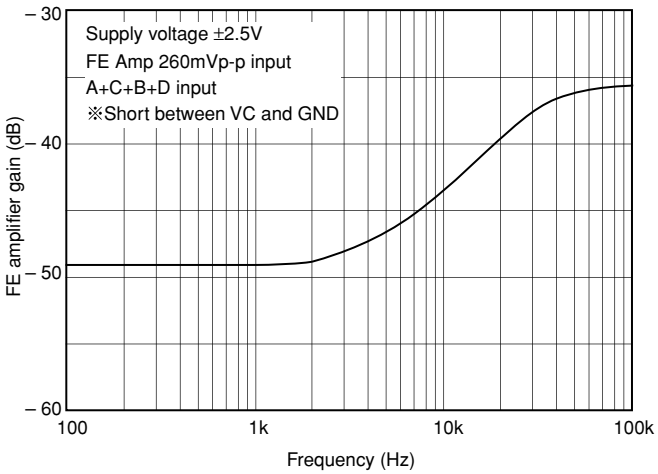

FE adjustment range characteristics

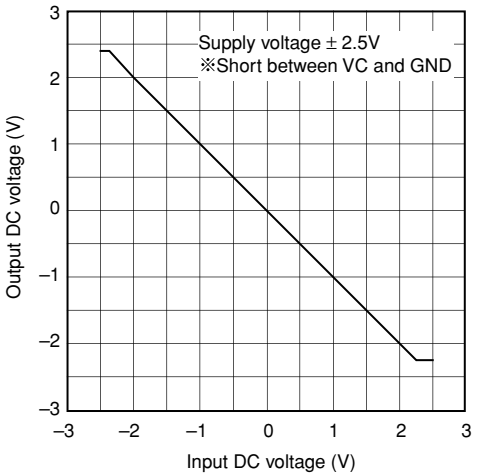

TE amplifier frequency characteristics
(Frequency response comparison for F input and E input)

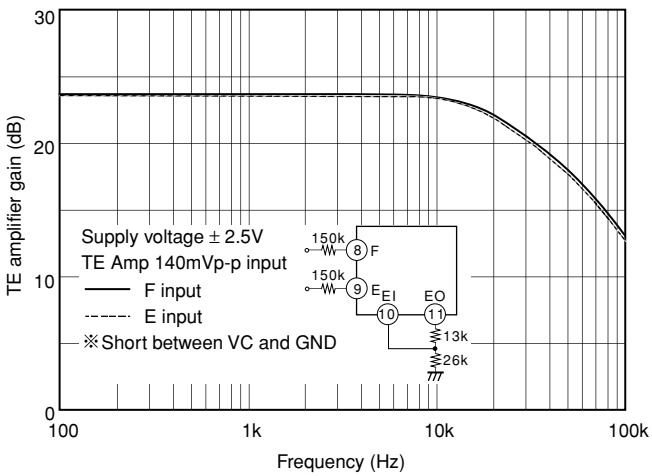

TE amplifier frequency error characteristics

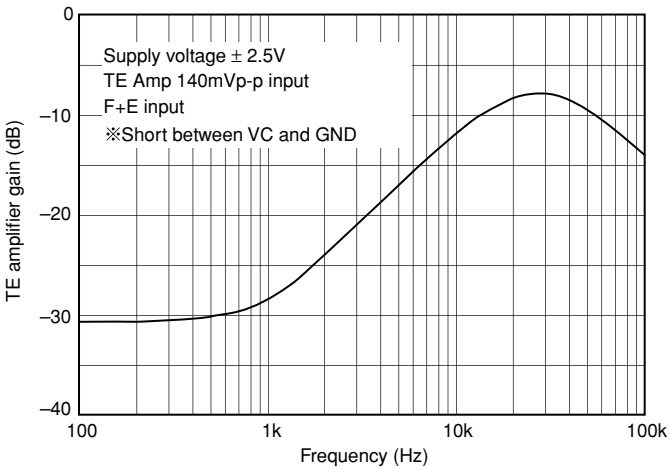

APC I/O voltage characteristics

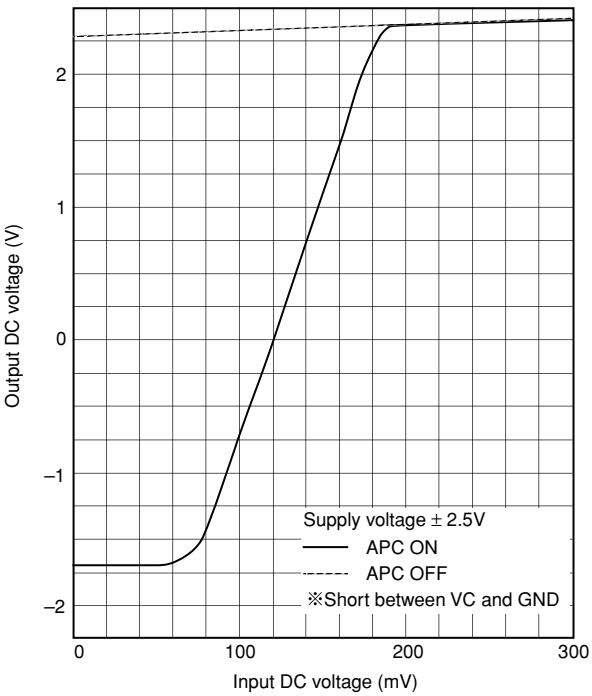

Package Outline Unit: mm

20PIN SOP (PLASTIC) 300MIL

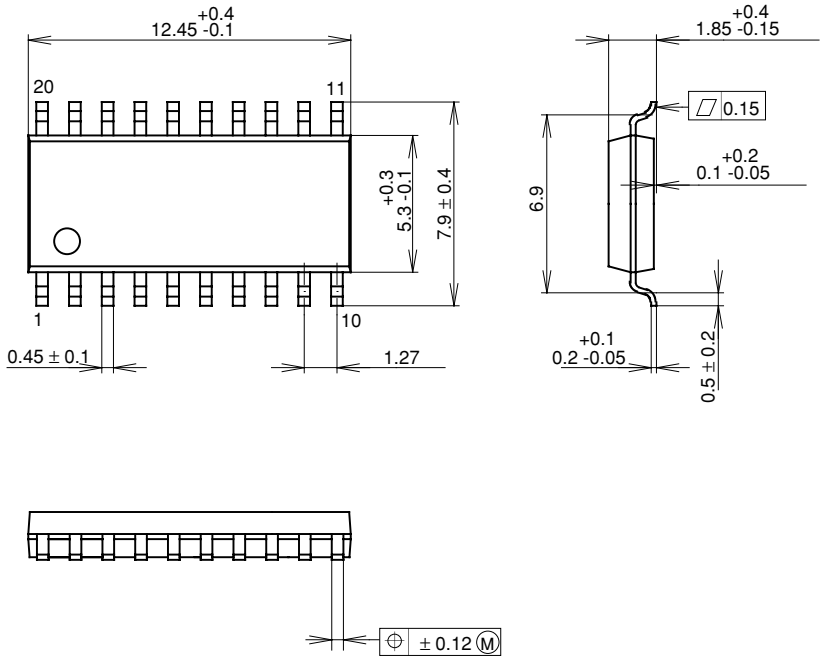

SONY CODE	SOP-20P-L01
EIAJ CODE	*SOP020-P-0300-A
JEDEC CODE	————————

PACKAGE STRUCTURE

PACKAGE MATERIAL	EPOXY RESIN
LEAD TREATMENT	SOLDER PLATING
LEAD MATERIAL	COPPER ALLOY
PACKAGE WEIGHT	0.3g

20PIN SOP (PLASTIC) 300MIL

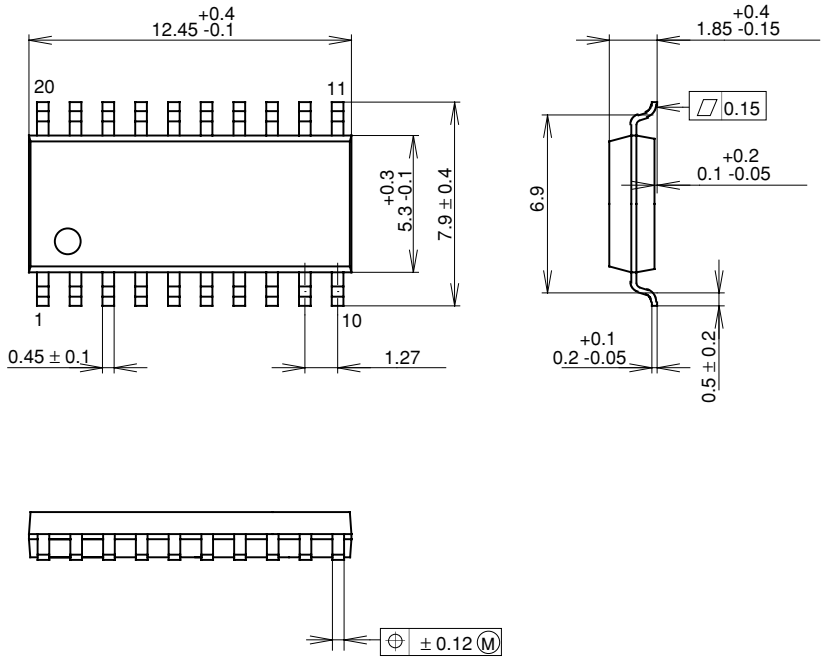

PACKAGE STRUCTURE

PACKAGE MATERIAL	EPOXY RESIN
LEAD TREATMENT	SOLDER PLATING
LEAD MATERIAL	COPPER ALLOY
PACKAGE WEIGHT	0.3g

SONY CODE	SOP-20P-L01
EIAJ CODE	*SOP020-P-0300-A
JEDEC CODE	————————

LEAD PLATING SPECIFICATIONS

ITEM	SPEC.
LEAD MATERIAL	COPPER ALLOY
SOLDER COMPOSITION	Sn-Bi Bi:1-4wt%
PLATING THICKNESS	5-18µm

Littlediode supplies new, hard to find or obsolete electronic components and semiconductors all over the world.

With over two million different components listed you are sure to find the part you need.

Feel free to visit us today at our online store:

LittleDiode.com

Looking forward to providing you with the best possible service.