FAIRCHILD SEMICONDUCTOR™

August 1986
Revised March 2000

DM74LS393
Dual 4-Bit Binary Counter

General Description

Each of these monolithic circuits contains eight master-slave flip-flops and additional gating to implement two individual four-bit counters in a single package. The DM74LS393 comprises two independent four-bit binary counters each having a clear and a clock input. N-bit binary counters can be implemented with each package providing the capability of divide-by-256. The DM74LS393 has parallel outputs from each counter stage so that any submultiple of the input count frequency is available for system-timing signals.

Features

- Dual version of the popular DM74LS93
- DM74LS393 dual 4-bit binary counter with individual clocks
- Direct clear for each 4-bit counter
- Dual 4-bit versions can significantly improve system densities by reducing counter package count by 50%
- Typical maximum count frequency 35 MHz
- Buffered outputs reduce possibility of collector commutation

Ordering Code:

Order Number	Package Number	Package Description
DM74LS393M	M14A	14-Lead Small Outline Integrated Circuit (SOIC), JEDEC MS-120, 0.150 Narrow
DM74LS373N	N14A	14-Lead Plastic Dual-In-Line Package (PDIP), JEDEC MS-001, 0.300 Wide

Devices also available in Tape and Reel. Specify by appending the suffix letter "X" to the ordering code.

Connection Diagram

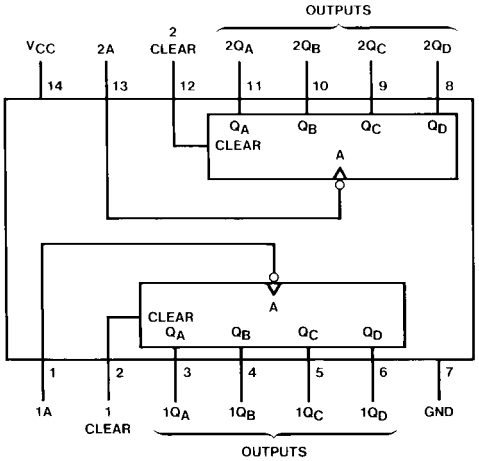

Function Table

Counter Sequence (Each Counter)

Count	Outputs			
	Q_D	Q_C	Q_B	Q_A
0	L	L	L	L
1	L	L	L	H
2	L	L	H	L
3	L	L	H	H
4	L	H	L	L
5	L	H	L	H
6	L	H	H	L
7	L	H	H	H
8	H	L	L	L
9	H	L	L	H
10	H	L	H	L
11	H	L	H	H
12	H	H	L	L
13	H	H	L	H
14	H	H	H	L
15	H	H	H	H

H = HIGH Logic Level
L = LOW Logic Level

© 2000 Fairchild Semiconductor Corporation

Logic Diagram

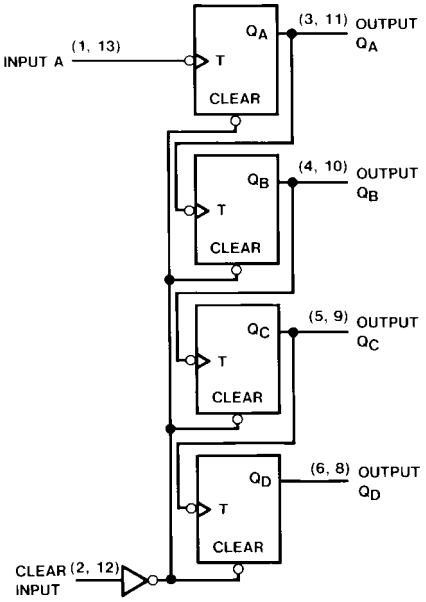

Absolute Maximum Ratings(Note 1)

Supply Voltage	7V
Input Voltage	
Clear	7V
A	5.5V
Operating Free Air Temperature Range	0°C to +70°C
Storage Temperature Range	–65°C to +150°C

Note 1: The "Absolute Maximum Ratings" are those values beyond which the safety of the device cannot be guaranteed. The device should not be operated at these limits. The parametric values defined in the Electrical Characteristics tables are not guaranteed at the absolute maximum ratings. The "Recommended Operating Conditions" table will define the conditions for actual device operation.

Recommended Operating Conditions

Symbol	Parameter		Min	Nom	Max	Units
V_{CC}	Supply Voltage		4.75	5	5.25	V
V_{IH}	HIGH Level Input Voltage		2			V
V_{IL}	LOW Level Input Voltage				0.8	V
I_{OH}	HIGH Level Output Current				–0.4	mA
I_{OL}	LOW Level Output Current				8	mA
f_{CLK}	Clock Frequency (Note 2)		0		25	MHz
f_{CLK}	Clock Frequency (Note 3)		0		20	MHz
t_W	Pulse Width (Note 5)	A	20			ns
		Clear HIGH	20			
t_{REL}	Clear Release Time (Note 4)(Note 5)		25↓			ns
T_A	Free Air Operating Temperature		0		70	°C

Note 2: C_L = 15 pF, R_L = 2 kΩ, T_A = 25°C and V_{CC} = 5V.

Note 3: C_L = 50 pF, R_L = 2 kΩ, T_A = 25°C and V_{CC} = 5V.

Note 4: The symbol (↓) indicates that the falling edge of the clear pulse is used for reference.

Note 5: T_A = 25°C, and V_{CC} = 5V.

Electrical Characteristics

over recommended operating free air temperature range (unless otherwise noted)

Symbol	Parameter	Conditions		Min	Typ (Note 6)	Max	Units
V_I	Input Clamp Voltage	V_{CC} = Min, I_I = –18 mA				–1.5	V
V_{OH}	HIGH Level Output Voltage	V_{CC} = Min, I_{OH} = Max, V_{IL} = Max, V_{IH} = Min		2.7	3.4		V
V_{OL}	LOW Level Output Voltage	V_{CC} = Min, I_{OL} = Max, V_{IL} = Max, V_{IH} = Min			0.35	0.5	V
		I_{OL} = 4 mA, V_{CC} = Min			0.25	0.4	
I_I	Input Current @ Max Input Voltage	V_{CC} = Max, V_I = 7V	Clear			0.1	mA
		V_{CC} = Max, V_I = 5.5V	A			0.2	
I_{IH}	HIGH Level Input Current	V_{CC} = Max, V_I = 2.7V	Clear			20	μA
			A			40	
I_{IL}	LOW Level Input Current	V_{CC} = Max, V_I = 0.4V	Clear			–0.4	mA
			A			–1.6	
I_{OS}	Short Circuit Output Current	V_{CC} = Max (Note 7)		–20		–100	mA
I_{CC}	Supply Current	V_{CC} = Max (Note 8)			15	26	mA

Note 6: All typicals are at V_{CC} = 5V, T_A = 25°C.

Note 7: Not more than one output should be shorted at a time, and the duration should not exceed one second.

Note 8: I_{CC} is measured with all outputs open, both CLEAR inputs grounded following momentary connection to 4.5V, and all other inputs grounded.

Switching Characteristics

at V_{CC} = 5V and T_A = 25°C

Symbol	Parameter	From (Input) To (Output)	R_L = 2 kΩ				Units
			C_L = 15 pF		C_L = 50 pF		
			Min	Max	Min	Max	
f_{MAX}	Maximum Clock Frequency	A to Q_A	25		20		MHz
t_{PLH}	Propagation Delay Time LOW-to-HIGH Level Output	A to Q_A		20		24	ns
t_{PHL}	Propagation Delay Time HIGH-to-LOW Level Output	A to Q_A		20		30	ns
t_{PLH}	Propagation Delay Time LOW-to-HIGH Level Output	A to Q_D		60		87	ns
t_{PHL}	Propagation Delay Time HIGH-to-LOW Level Output	A to Q_D		60		87	ns
t_{PHL}	Propagation Delay Time HIGH-to-LOW Level Output	Clear to Any Q		39		45	ns

Physical Dimensions inches (millimeters) unless otherwise noted

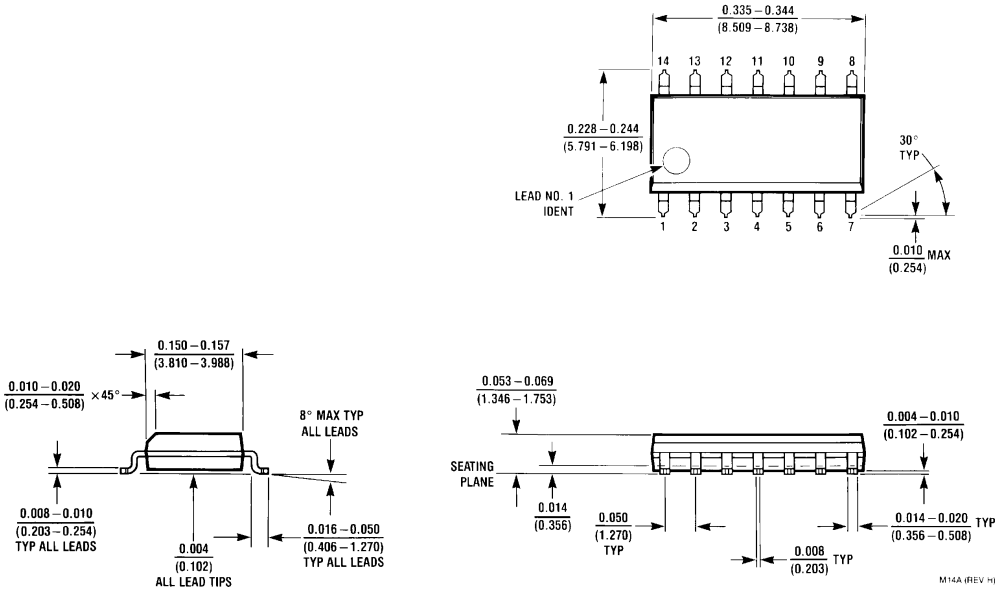

14-Lead Small Outline Integrated Circuit (SOIC), JEDEC MS-120, 0.150 Narrow
Package Number M14A

Physical Dimensions inches (millimeters) unless otherwise noted (Continued)

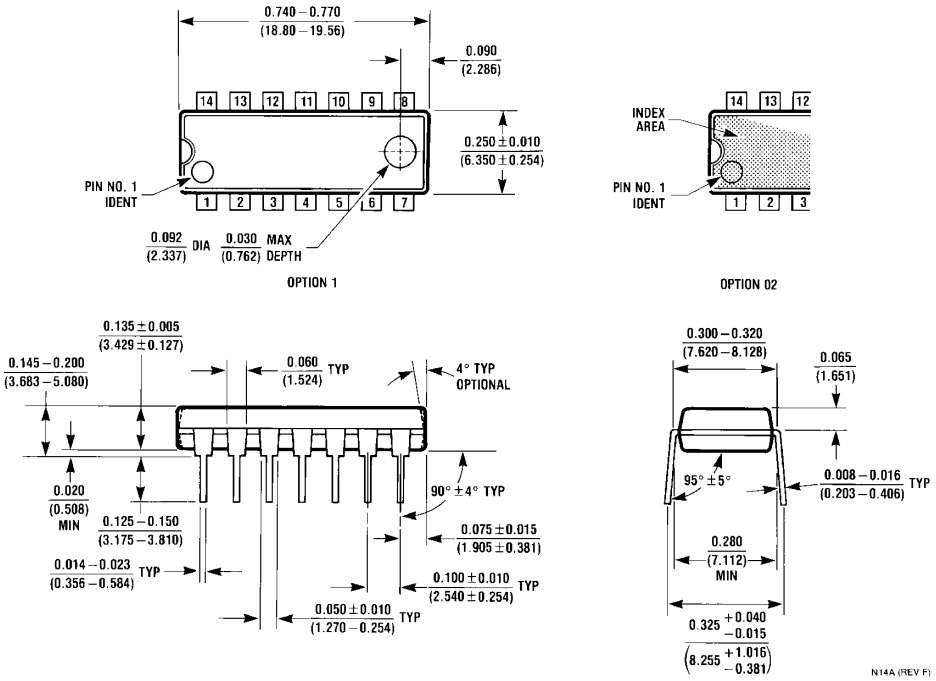

14-Lead Plastic Dual-In-Line Package (PDIP), JEDEC MS-001, 0.300 Wide
Package Number N14A

Fairchild does not assume any responsibility for use of any circuitry described, no circuit patent licenses are implied and Fairchild reserves the right at any time without notice to change said circuitry and specifications.

LIFE SUPPORT POLICY

FAIRCHILD'S PRODUCTS ARE NOT AUTHORIZED FOR USE AS CRITICAL COMPONENTS IN LIFE SUPPORT DEVICES OR SYSTEMS WITHOUT THE EXPRESS WRITTEN APPROVAL OF THE PRESIDENT OF FAIRCHILD SEMICONDUCTOR CORPORATION. As used herein:

1. Life support devices or systems are devices or systems which, (a) are intended for surgical implant into the body, or (b) support or sustain life, and (c) whose failure to perform when properly used in accordance with instructions for use provided in the labeling, can be reasonably expected to result in a significant injury to the user.
2. A critical component in any component of a life support device or system whose failure to perform can be reasonably expected to cause the failure of the life support device or system, or to affect its safety or effectiveness.

www.fairchildsemi.com

This datasheet has been downloaded from:

www.DatasheetCatalog.com

Datasheets for electronic components.

Littlediode supplies new, hard to find or obsolete electronic components and semiconductors all over the world.

With over two million different components listed you are sure to find the part you need.

Feel free to visit us today at our online store:

LittleDiode.com

Looking forward to providing you with the best possible service.