KA78XX/KA78XXA

3-Terminal 1A Positive Voltage Regulator

Features

- Output Current up to 1A
- Output Voltages of 5, 6, 8, 9, 10, 12, 15, 18, 24V
- Thermal Overload Protection
- Short Circuit Protection
- Output Transistor Safe Operating Area Protection

Description

The KA78XX/KA78XXA series of three-terminal positive regulator are available in the TO-220/D-PAK package and with several fixed output voltages, making them useful in a wide range of applications. Each type employs internal current limiting, thermal shut down and safe operating area protection, making it essentially indestructible. If adequate heat sinking is provided, they can deliver over 1A output current. Although designed primarily as fixed voltage regulators, these devices can be used with external components to obtain adjustable voltages and currents.

TO-220



D-PAK



1. Input 2. GND 3. Output

Internal Block Digram

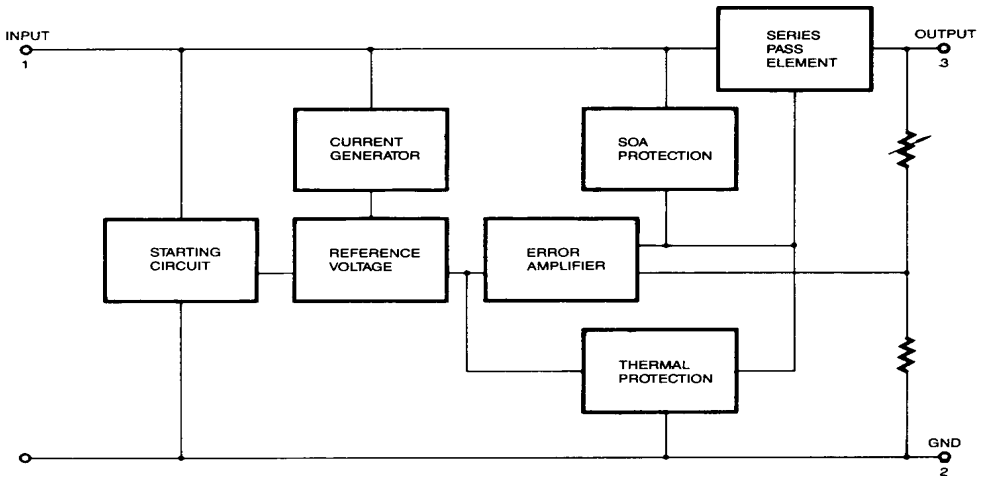

Rev. 1.0.0

©2001 Fairchild Semiconductor Corporation

Absolute Maximum Ratings

Parameter	Symbol	Value	Unit
Input Voltage (for V_O = 5V to 18V) (for V_O = 24V)	V_I V_I	35 40	V V
Thermal Resistance Junction-Cases (TO-220)	$R_{\theta JC}$	5	°C/W
Thermal Resistance Junction-Air (TO-220)	$R_{\theta JA}$	65	°C/W
Operating Temperature Range (KA78XX/A/R)	T_{OPR}	0 ~ +125	°C
Storage Temperature Range	T_{STG}	-65 ~ +150	°C

Electrical Characteristics (KA7805/KA7805R)

(Refer to test circuit ,0°C < T_J < 125°C, I_O = 500mA, V_I =10V, C_I= 0.33μF, C_O=0.1μF, unless otherwise specified)

Parameter	Symbol	Conditions		KA7805			Unit
				Min.	Typ.	Max.	
Output Voltage	V_O	T_J =+25 °C		4.8	5.0	5.2	V
		5.0mA ≤ Io ≤ 1.0A, P_O ≤ 15W V_I = 7V to 20V		4.75	5.0	5.25	
Line Regulation (Note1)	Regline	T_J=+25 °C	V_O = 7V to 25V	-	4.0	100	mV
			V_I = 8V to 12V	-	1.6	50	
Load Regulation (Note1)	Regload	T_J=+25 °C	I_O = 5.0mA to1.5A	-	9	100	mV
			I_O =250mA to 750mA	-	4	50	
Quiescent Current	I_Q	T_J =+25 °C		-	5.0	8.0	mA
Quiescent Current Change	ΔI_Q	I_O = 5mA to 1.0A		-	0.03	0.5	mA
		V_I= 7V to 25V		-	0.3	1.3	
Output Voltage Drift	$\Delta V_O/\Delta T$	I_O= 5mA		-	-0.8	-	mV/ °C
Output Noise Voltage	V_N	f = 10Hz to 100KHz, T_A=+25 °C		-	42	-	μV/V_O
Ripple Rejection	RR	f = 120Hz V_O = 8V to 18V		62	73	-	dB
Dropout Voltage	V_{Drop}	I_O = 1A, T_J =+25 °C		-	2	-	V
Output Resistance	r_O	f = 1KHz		-	15	-	mΩ
Short Circuit Current	I_{SC}	V_I = 35V, T_A =+25 °C		-	230	-	mA
Peak Current	I_{PK}	T_J =+25 °C		-	2.2	-	A

Note:

1. Load and line regulation are specified at constant junction temperature. Changes in V_o due to heating effects must be taken into account separately. Pulse testing with low duty is used.

Electrical Characteristics (KA7806/KA7806R)

(Refer to test circuit ,$0^{\circ}C < T_J < 125^{\circ}C$, I_O = 500mA, V_I =11V, C_I= 0.33μF, C_O=0.1μF, unless otherwise specified)

Parameter	Symbol	Conditions		KA7806			Unit
				Min.	Typ.	Max.	
Output Voltage	V_O	T_J =+25 °C		5.75	6.0	6.25	V
		5.0mA ≤ I_O ≤ 1.0A, P_O ≤ 15W V_I = 8.0V to 21V		5.7	6.0	6.3	
Line Regulation (Note1)	Regline	T_J =+25 °C	V_I = 8V to 25V	-	5	120	mV
			V_I = 9V to 13V	-	1.5	60	
Load Regulation (Note1)	Regload	T_J =+25 °C	I_O =5mA to 1.5A	-	9	120	mV
			I_O =250mA to750mA	-	3	60	
Quiescent Current	I_Q	T_J =+25 °C		-	5.0	8.0	mA
Quiescent Current Change	ΔI_Q	I_O = 5mA to 1A		-	-	0.5	mA
		V_I = 8V to 25V		-	-	1.3	
Output Voltage Drift	$\Delta V_O/\Delta T$	I_O = 5mA		-	-0.8	-	mV/ °C
Output Noise Voltage	V_N	f = 10Hz to 100KHz, T_A =+25 °C		-	45	-	μV/Vo
Ripple Rejection	RR	f = 120Hz V_I = 9V to 19V		59	75	-	dB
Dropout Voltage	V_{Drop}	I_O = 1A, T_J =+25 °C		-	2	-	V
Output Resistance	r_O	f = 1KHz		-	19	-	mΩ
Short Circuit Current	I_{SC}	V_I= 35V, T_A=+25 °C		-	250	-	mA
Peak Current	I_{PK}	T_J =+25 °C		-	2.2	-	A

Note:

1. Load and line regulation are specified at constant junction temperature. Changes in V_O due to heating effects must be taken into account separately. Pulse testing with low duty is used.

Electrical Characteristics (KA7808/KA7808R)

(Refer to test circuit ,$0^{\circ}C < T_J < 125^{\circ}C$, I_O = 500mA, V_I =14V, C_I= 0.33µF, C_O=0.1µF, unless otherwise specified)

Parameter	Symbol	Conditions		KA7808			Unit
				Min.	Typ.	Max.	
Output Voltage	V_O	T_J =+25 °C		7.7	8.0	8.3	V
		5.0mA ≤ I_O ≤ 1.0A, P_O ≤ 15W V_I = 10.5V to 23V		7.6	8.0	8.4	
Line Regulation (Note1)	Regline	T_J =+25 °C	V_I = 10.5V to 25V	-	5.0	160	mV
			V_I = 11.5V to 17V	-	2.0	80	
Load Regulation (Note1)	Regload	T_J =+25 °C	I_O = 5.0mA to 1.5A	-	10	160	mV
			I_O= 250mA to 750mA	-	5.0	80	
Quiescent Current	I_Q	T_J =+25 °C		-	5.0	8.0	mA
Quiescent Current Change	ΔI_Q	I_O = 5mA to 1.0A		-	0.05	0.5	mA
		V_I = 10.5A to 25V		-	0.5	1.0	
Output Voltage Drift	$\Delta V_O/\Delta T$	I_O = 5mA		-	-0.8	-	mV/ °C
Output Noise Voltage	V_N	f = 10Hz to 100KHz, T_A =+25 °C		-	52	-	µV/Vo
Ripple Rejection	RR	f = 120Hz, V_I= 11.5V to 21.5V		56	73	-	dB
Dropout Voltage	V_{Drop}	I_O = 1A, T_J=+25 °C		-	2	-	V
Output Resistance	r_O	f = 1KHz		-	17	-	mΩ
Short Circuit Current	I_{SC}	V_I= 35V, T_A =+25 °C		-	230	-	mA
Peak Current	I_{PK}	T_J =+25 °C		-	2.2	-	A

Note:

1. Load and line regulation are specified at constant junction temperature. Changes in V_O due to heating effects must be taken into account separately. Pulse testing with low duty is used.

Electrical Characteristics (KA7809/KA7809R)

(Refer to test circuit ,0°C < T_J < 125°C, I_O = 500mA, V_I =15V, C_I= 0.33µF, C_O=0.1µF, unless otherwise specified)

Parameter	Symbol	Conditions		KA7809			Unit
				Min.	Typ.	Max.	
Output Voltage	V_O	T_J =+25 °C		8.65	9	9.35	V
		5.0mA≤ I_O ≤1.0A, P_O ≤15W V_I= 11.5V to 24V		8.6	9	9.4	
Line Regulation (Note1)	Regline	T_J=+25 °C	V_I = 11.5V to 25V	-	6	180	mV
			V_I = 12V to 17V	-	2	90	
Load Regulation (Note1)	Regload	T_J=+25 °C	I_O = 5mA to 1.5A	-	12	180	mV
			I_O = 250mA to 750mA	-	4	90	
Quiescent Current	I_Q	T_J=+25 °C		-	5.0	8.0	mA
Quiescent Current Change	ΔI_Q	I_O = 5mA to 1.0A		-	-	0.5	mA
		V_I = 11.5V to 26V		-	-	1.3	
Output Voltage Drift	$\Delta V_O/\Delta T$	I_O = 5mA		-	-1	-	mV/ °C
Output Noise Voltage	V_N	f = 10Hz to 100KHz, T_A =+25 °C		-	58	-	µV/Vo
Ripple Rejection	RR	f = 120Hz V_I = 13V to 23V		56	71	-	dB
Dropout Voltage	V_{Drop}	I_O = 1A, T_J=+25 °C		-	2	-	V
Output Resistance	r_O	f = 1KHz		-	17	-	mΩ
Short Circuit Current	I_{SC}	V_I= 35V, T_A =+25 °C		-	250	-	mA
Peak Current	I_{PK}	T_J= +25 °C		-	2.2	-	A

Note:

1. Load and line regulation are specified at constant junction temperature. Changes in V_O due to heating effects must be taken into account separately. Pulse testing with low duty is used.

Electrical Characteristics (KA7810)

(Refer to test circuit ,0°C < T_J < 125°C, I_O = 500mA, V_I =16V, C_I= 0.33µF, C_O=0.1µF, unless otherwise specified)

Parameter	Symbol	Conditions		KA7810			Unit
				Min.	Typ.	Max.	
Output Voltage	V_O	T_J =+25 °C		9.6	10	10.4	V
		5.0mA ≤ I_O ≤ 1.0A, P_O ≤ 15W V_I = 12.5V to 25V		9.5	10	10.5	
Line Regulation (Note1)	Regline	T_J =+25 °C	V_I = 12.5V to 25V	-	10	200	mV
			V_I = 13V to 25V	-	3	100	
Load Regulation (Note1)	Regload	T_J =+25 °C	I_O = 5mA to 1.5A	-	12	200	mV
			I_O = 250mA to 750mA	-	4	400	
Quiescent Current	I_Q	T_J =+25 °C		-	5.1	8.0	mA
Quiescent Current Change	ΔI_Q	I_O = 5mA to 1.0A		-	-	0.5	mA
		V_I = 12.5V to 29V		-	-	1.0	
Output Voltage Drift	$\Delta V_O/\Delta T$	I_O = 5mA		-	-1	-	mV/ °C
Output Noise Voltage	V_N	f = 10Hz to 100KHz, T_A =+25 °C		-	58	-	µV/Vo
Ripple Rejection	RR	f = 120Hz V_I = 13V to 23V		56	71	-	dB
Dropout Voltage	V_{Drop}	I_O = 1A, T_J=+25 °C		-	2	-	V
Output Resistance	r_O	f = 1KHz		-	17	-	mΩ
Short Circuit Current	I_{SC}	V_I = 35V, T_A=+25 °C		-	250	-	mA
Peak Current	I_{PK}	T_J =+25 °C		-	2.2	-	A

Note:

1. Load and line regulation are specified at constant junction temperature. Changes in V_O due to heating effects must be taken into account separately. Pulse testing with low duty is used.

Electrical Characteristics (KA7812/KA7812R)

(Refer to test circuit ,0°C < T_J < 125°C, I_O = 500mA, V_I =19V, C_I= 0.33μF, C_O=0.1μF, unless otherwise specified)

Parameter	Symbol	Conditions		KA7812/KA7812R			Unit
				Min.	Typ.	Max.	
Output Voltage	V_O	T_J =+25 °C		11.5	12	12.5	V
		5.0mA ≤ I_O≤1.0A, P_O≤15W V_I = 14.5V to 27V		11.4	12	12.6	
Line Regulation (Note1)	Regline	T_J =+25 °C	V_I = 14.5V to 30V	-	10	240	mV
			V_I = 16V to 22V	-	3.0	120	
Load Regulation (Note1)	Regload	T_J =+25 °C	I_O = 5mA to 1.5A	-	11	240	mV
			I_O = 250mA to 750mA	-	5.0	120	
Quiescent Current	I_Q	T_J =+25 °C		-	5.1	8.0	mA
Quiescent Current Change	ΔI_Q	I_O = 5mA to 1.0A		-	0.1	0.5	mA
		V_I = 14.5V to 30V		-	0.5	1.0	
Output Voltage Drift	$\Delta V_O/\Delta T$	I_O = 5mA		-	-1	-	mV/ °C
Output Noise Voltage	V_N	f = 10Hz to 100KHz, T_A =+25 °C		-	76	-	μV/Vo
Ripple Rejection	RR	f = 120Hz V_I = 15V to 25V		55	71	-	dB
Dropout Voltage	V_{Drop}	I_O = 1A, T_J=+25 °C		-	2	-	V
Output Resistance	r_O	f = 1KHz		-	18	-	mΩ
Short Circuit Current	I_{SC}	V_I = 35V, T_A=+25 °C		-	230	-	mA
Peak Current	I_{PK}	T_J = +25 °C		-	2.2	-	A

Note:

1. Load and line regulation are specified at constant junction temperature. Changes in V_O due to heating effects must be taken into account separately. Pulse testing with low duty is used.

Electrical Characteristics (KA7815)

(Refer to test circuit ,0°C < T_J < 125°C, I_O = 500mA, V_I =23V, C_I= 0.33µF, C_O=0.1µF, unless otherwise specified)

Parameter	Symbol	Conditions		KA7815			Unit
				Min.	Typ.	Max.	
Output Voltage	V_O	T_J =+25 °C		14.4	15	15.6	V
		5.0mA ≤ I_O≤1.0A, P_O≤15W V_I = 17.5V to 30V		14.25	15	15.75	
Line Regulation (Note1)	Regline	T_J =+25 °C	V_I = 17.5V to 30V	-	11	300	mV
			V_I = 20V to 26V	-	3	150	
Load Regulation (Note1)	Regload	T_J =+25 °C	I_O = 5mA to 1.5A	-	12	300	mV
			I_O = 250mA to 750mA	-	4	150	
Quiescent Current	I_Q	T_J =+25 °C		-	5.2	8.0	mA
Quiescent Current Change	ΔI_Q	I_O = 5mA to 1.0A		-	-	0.5	mA
		V_I = 17.5V to 30V		-	-	1.0	
Output Voltage Drift	$\Delta V_O/\Delta T$	I_O = 5mA		-	-1	-	mV/ °C
Output Noise Voltage	V_N	f = 10Hz to 100KHz, T_A =+25 °C		-	90	-	µV/Vo
Ripple Rejection	RR	f = 120Hz V_I = 18.5V to 28.5V		54	70	-	dB
Dropout Voltage	V_{Drop}	I_O = 1A, T_J=+25 °C		-	2	-	V
Output Resistance	r_O	f = 1KHz		-	19	-	mΩ
Short Circuit Current	I_{SC}	V_I = 35V, T_A=+25 °C		-	250	-	mA
Peak Current	I_{PK}	T_J =+25 °C		-	2.2	-	A

Note:

1. Load and line regulation are specified at constant junction temperature. Changes in V_O due to heating effects must be taken into account separately. Pulse testing with low duty is used.

Electrical Characteristics (KA7818)

(Refer to test circuit ,0°C < T_J < 125°C, I_O = 500mA, V_I =27V, C_I= 0.33µF, C_O=0.1µF, unless otherwise specified)

Parameter	Symbol	Conditions		KA7818			Unit
				Min.	Typ.	Max.	
Output Voltage	V_O	T_J =+25 °C		17.3	18	18.7	V
		5.0mA ≤ I_O ≤1.0A, P_O ≤15W V_I = 21V to 33V		17.1	18	18.9	
Line Regulation (Note1)	Regline	T_J =+25 °C	V_I = 21V to 33V	-	15	360	mV
			V_I = 24V to 30V	-	5	180	
Load Regulation (Note1)	Regload	T_J =+25 °C	I_O = 5mA to 1.5A	-	15	360	mV
			I_O = 250mA to 750mA	-	5.0	180	
Quiescent Current	I_Q	T_J =+25 °C		-	5.2	8.0	mA
Quiescent Current Change	ΔI_Q	I_O = 5mA to 1.0A		-	-	0.5	mA
		V_I = 21V to 33V		-	-	1	
Output Voltage Drift	$\Delta V_O/\Delta T$	I_O = 5mA		-	-1	-	mV/ °C
Output Noise Voltage	V_N	f = 10Hz to 100KHz, T_A =+25 °C		-	110	-	µV/Vo
Ripple Rejection	RR	f = 120Hz V_I = 22V to 32V		53	69	-	dB
Dropout Voltage	V_{Drop}	I_O = 1A, T_J=+25 °C		-	2	-	V
Output Resistance	r_O	f = 1KHz		-	22	-	mΩ
Short Circuit Current	I_{SC}	V_I = 35V, T_A=+25 °C		-	250	-	mA
Peak Current	I_{PK}	T_J =+25 °C		-	2.2	-	A

Note:

1. Load and line regulation are specified at constant junction temperature. Changes in V_O due to heating effects must be taken into account separately. Pulse testing with low duty is used.

Electrical Characteristics (KA7824)

(Refer to test circuit ,0°C < T_J < 125°C, I_O = 500mA, V_I =33V, C_I= 0.33µF, C_O=0.1µF, unless otherwise specified)

Parameter	Symbol	Conditions		KA7824			Unit
				Min.	Typ.	Max.	
Output Voltage	V_O	T_J =+25 °C		23	24	25	V
		5.0mA ≤ I_O ≤ 1.0A, P_O ≤ 15W V_I = 27V to 38V		22.8	24	25.25	
Line Regulation (Note1)	Regline	T_J =+25 °C	V_I = 27V to 38V	-	17	480	mV
			V_I = 30V to 36V	-	6	240	
Load Regulation (Note1)	Regload	T_J =+25 °C	I_O = 5mA to 1.5A	-	15	480	mV
			I_O = 250mA to 750mA	-	5.0	240	
Quiescent Current	I_Q	T_J =+25 °C		-	5.2	8.0	mA
Quiescent Current Change	ΔI_Q	I_O = 5mA to 1.0A		-	0.1	0.5	mA
		V_I = 27V to 38V		-	0.5	1	
Output Voltage Drift	$\Delta V_O/\Delta T$	I_O = 5mA		-	-1.5	-	mV/°C
Output Noise Voltage	V_N	f = 10Hz to 100KHz, T_A =+25 °C		-	60	-	µV/Vo
Ripple Rejection	RR	f = 120Hz V_I = 28V to 38V		50	67	-	dB
Dropout Voltage	V_{Drop}	I_O = 1A, T_J=+25 °C		-	2	-	V
Output Resistance	r_O	f = 1KHz		-	28	-	mΩ
Short Circuit Current	I_{SC}	V_I = 35V, T_A=+25 °C		-	230	-	mA
Peak Current	I_{PK}	T_J =+25 °C		-	2.2	-	A

Note:

1. Load and line regulation are specified at constant junction temperature. Changes in V_O due to heating effects must be taken into account separately. Pulse testing with low duty is used.

Electrical Characteristics (KA7805A)

(Refer to the test circuits. $0^oC < T_J < +125\ ^oC$, I_O =1A, V_I = 10V, C_I=0.33μF, C_O=0.1μF, unless otherwise specified)

Parameter	Symbol	Conditions		Min.	Typ.	Max.	Unit
Output Voltage	V_O	T_J =+25 ^oC		4.9	5	5.1	V
		I_O = 5mA to 1A, $P_O \leq$ 15W V_I = 7.5V to 20V		4.8	5	5.2	
Line Regulation (Note1)	Regline	V_I = 7.5V to 25V I_O = 500mA		-	5	50	mV
		V_I = 8V to 12V		-	3	50	
		T_J =+25 ^oC	V_I= 7.3V to 20V	-	5	50	
			V_I= 8V to 12V	-	1.5	25	
Load Regulation (Note1)	Regload	T_J =+25 ^oC I_O = 5mA to 1.5A		-	9	100	mV
		I_O = 5mA to 1A		-	9	100	
		I_O = 250mA to 750mA		-	4	50	
Quiescent Current	I_Q	T_J =+25 ^oC		-	5.0	6.0	mA
Quiescent Current Change	ΔI_Q	I_O = 5mA to 1A		-	-	0.5	mA
		V_I = 8 V to 25V, I_O = 500mA		-	-	0.8	
		V_I = 7.5V to 20V, T_J =+25 ^oC		-	-	0.8	
Output Voltage Drift	$\Delta V/\Delta T$	Io = 5mA		-	-0.8	-	mV/ ^oC
Output Noise Voltage	V_N	f = 10Hz to 100KHz T_A =+25 ^oC		-	10	-	μV/Vo
Ripple Rejection	RR	f = 120Hz, I_O = 500mA V_I = 8V to 18V		-	68	-	dB
Dropout Voltage	V_{Drop}	I_O = 1A, T_J =+25 ^oC		-	2	-	V
Output Resistance	r_O	f = 1KHz		-	17	-	mΩ
Short Circuit Current	I_{SC}	V_I= 35V, T_A =+25 ^oC		-	250	-	mA
Peak Current	I_{PK}	T_J= +25 ^oC		-	2.2	-	A

Note:

1. Load and line regulation are specified at constant junction temperature. Change in V_O due to heating effects must be taken into account separately. Pulse testing with low duty is used.

Electrical Characteristics (KA7806A)

(Refer to the test circuits. $0^oC < T_J < +125\ ^oC$, I_O =1A, V_I = 11V, C_I=0.33μF, C_O=0.1μF, unless otherwise specified)

Parameter	Symbol	Conditions		Min.	Typ.	Max.	Unit
Output Voltage	V_O	T_J =+25 ^oC		5.58	6	6.12	V
		I_O = 5mA to 1A, $P_O \leq$ 15W V_I = 8.6V to 21V		5.76	6	6.24	
Line Regulation (Note1)	Regline	V_I= 8.6V to 25V I_O = 500mA		-	5	60	mV
		V_I= 9V to 13V		-	3	60	
		T_J =+25 ^oC	V_I= 8.3V to 21V	-	5	60	
			V_I= 9V to 13V	-	1.5	30	
Load Regulation (Note1)	Regload	T_J =+25 ^oC I_O = 5mA to 1.5A		-	9	100	mV
		I_O = 5mA to 1A		-	4	100	
		I_O = 250mA to 750mA		-	5.0	50	
Quiescent Current	I_Q	T_J =+25 ^oC		-	4.3	6.0	mA
Quiescent Current Change	ΔI_Q	I_O = 5mA to 1A		-	-	0.5	mA
		V_I = 9V to 25V, I_O = 500mA		-	-	0.8	
		V_I= 8.5V to 21V, T_J =+25 ^oC		-	-	0.8	
Output Voltage Drift	$\Delta V/\Delta T$	I_O = 5mA		-	-0.8	-	mV/ ^oC
Output Noise Voltage	V_N	f = 10Hz to 100KHz T_A =+25 ^oC		-	10	-	μV/Vo
Ripple Rejection	RR	f = 120Hz, I_O = 500mA V_I = 9V to 19V		-	65	-	dB
Dropout Voltage	V_{Drop}	I_O = 1A, T_J =+25 ^oC		-	2	-	V
Output Resistance	r_O	f = 1KHz		-	17	-	mΩ
Short Circuit Current	I_{SC}	V_I= 35V, T_A =+25 ^oC		-	250	-	mA
Peak Current	I_{PK}	T_J=+25 ^oC		-	2.2	-	A

Note:

1. Load and line regulation are specified at constant junction temperature. Change in V_O due to heating effects must be taken into account separately. Pulse testing with low duty is used.

Electrical Characteristics (KA7808A)

(Refer to the test circuits. $0^oC < T_J < +125\ ^oC$, I_O =1A, V_I = 14V, C_I=0.33μF, C_O=0.1μF, unless otherwise specified)

Parameter	Symbol	Conditions		Min.	Typ.	Max.	Unit
Output Voltage	V_O	T_J =+25 ^{o}C		7.84	8	8.16	V
		I_O = 5mA to 1A, P_O ≤15W V_I = 10.6V to 23V		7.7	8	8.3	
Line Regulation (Note1)	Regline	V_I= 10.6V to 25V I_O = 500mA		-	6	80	mV
		V_I= 11V to 17V		-	3	80	
		T_J =+25 ^{o}C	V_I= 10.4V to 23V	-	6	80	
			V_I= 11V to 17V	-	2	40	
Load Regulation (Note1)	Regload	T_J =+25 ^{o}C I_O = 5mA to 1.5A		-	12	100	mV
		I_O = 5mA to 1A		-	12	100	
		I_O = 250mA to 750mA		-	5	50	
Quiescent Current	I_Q	T_J =+25 ^{o}C		-	5.0	6.0	mA
Quiescent Current Change	ΔI_Q	I_O = 5mA to 1A		-	-	0.5	mA
		V_I = 11V to 25V, I_O = 500mA		-	-	0.8	
		V_I= 10.6V to 23V, T_J =+25 ^{o}C		-	-	0.8	
Output Voltage Drift	$\Delta V/\Delta T$	I_O = 5mA		-	-0.8	-	mV/ ^{o}C
Output Noise Voltage	V_N	f = 10Hz to 100KHz T_A =+25 ^{o}C		-	10	-	μV/Vo
Ripple Rejection	RR	f = 120Hz, I_O = 500mA V_I = 11.5V to 21.5V		-	62	-	dB
Dropout Voltage	V_{Drop}	I_O = 1A, T_J =+25 ^{o}C		-	2	-	V
Output Resistance	r_O	f = 1KHz		-	18	-	mΩ
Short Circuit Current	I_{SC}	V_I= 35V, T_A =+25 ^{o}C		-	250	-	mA
Peak Current	I_{PK}	T_J=+25 ^{o}C		-	2.2	-	A

Note:

1. Load and line regulation are specified at constant junction temperature. Change in V_O due to heating effects must be taken into account separately. Pulse testing with low duty is used.

Electrical Characteristics (KA7809A)

(Refer to the test circuits. $0^oC < T_J < +125\ ^oC$, I_O =1A, V_I = 15V, C_I=0.33μF, C_O=0.1μF, unless otherwise specified)

Parameter	Symbol	Conditions		Min.	Typ.	Max.	Unit
Output Voltage	V_O	T_J =+25°C		8.82	9.0	9.18	V
		I_O = 5mA to 1A, P_O≤15W V_I = 11.2V to 24V		8.65	9.0	9.35	
Line Regulation (Note1)	Regline	V_I= 11.7V to 25V I_O = 500mA		-	6	90	mV
		V_I= 12.5V to 19V		-	4	45	
		T_J =+25°C	V_I= 11.5V to 24V	-	6	90	
			V_I= 12.5V to 19V	-	2	45	
Load Regulation (Note1)	Regload	T_J =+25°C I_O = 5mA to 1.0A		-	12	100	mV
		I_O = 5mA to 1.0A		-	12	100	
		I_O = 250mA to 750mA		-	5	50	
Quiescent Current	I_Q	T_J =+25 °C		-	5.0	6.0	mA
Quiescent Current Change	ΔI_Q	V_I = 11.7V to 25V, T_J=+25 °C		-	-	0.8	mA
		V_I = 12V to 25V, I_O = 500mA		-	-	0.8	
		I_O = 5mA to 1.0A		-	-	0.5	
Output Voltage Drift	$\Delta V/\Delta T$	I_O = 5mA		-	-1.0	-	mV/ °C
Output Noise Voltage	V_N	f = 10Hz to 100KHz T_A =+25 °C		-	10	-	μV/Vo
Ripple Rejection	RR	f = 120Hz, I_O = 500mA V_I = 12V to 22V		-	62	-	dB
Dropout Voltage	V_{Drop}	I_O = 1A, T_J =+25 °C		-	2.0	-	V
Output Resistance	r_O	f = 1KHz		-	17	-	mΩ
Short Circuit Current	I_{SC}	V_I= 35V, T_A =+25 °C		-	250	-	mA
Peak Current	I_{PK}	T_J=+25°C		-	2.2	-	A

Note:

1. Load and line regulation are specified at constant junction temperature. Change in V_O due to heating effects must be taken into account separately. Pulse testing with low duty is used.

Electrical Characteristics (KA7810A)

(Refer to the test circuits. $0^oC < T_J < +125\ ^oC$, I_O =1A, V_I = 16V, C_I=0.33μF, C_O=0.1μF, unless otherwise specified)

Parameter	Symbol	Conditions		Min.	Typ.	Max.	Unit
Output Voltage	V_O	T_J =+25°C		9.8	10	10.2	V
		I_O = 5mA to 1A, $P_O \leq$ 15W V_I =12.8V to 25V		9.6	10	10.4	
Line Regulation (Note1)	Regline	V_I= 12.8V to 26V I_O = 500mA		-	8	100	mV
		V_I= 13V to 20V		-	4	50	
		T_J =+25 °C	V_I= 12.5V to 25V	-	8	100	
			V_I= 13V to 20V	-	3	50	
Load Regulation (Note1)	Regload	T_J =+25 °C I_O = 5mA to 1.5A		-	12	100	mV
		I_O = 5mA to 1.0A		-	12	100	
		I_O = 250mA to 750mA		-	5	50	
Quiescent Current	I_Q	T_J =+25 °C		-	5.0	6.0	mA
Quiescent Current Change	ΔI_Q	V_I = 13V to 26V, T_J=+25 °C		-	-	0.5	mA
		V_I = 12.8V to 25V, I_O = 500mA		-	-	0.8	
		I_O = 5mA to 1.0A		-	-	0.5	
Output Voltage Drift	$\Delta V/\Delta T$	I_O = 5mA		-	-1.0	-	mV/°C
Output Noise Voltage	V_N	f = 10Hz to 100KHz T_A =+25 °C		-	10	-	μV/Vo
Ripple Rejection	RR	f = 120Hz, I_O = 500mA V_I = 14V to 24V		-	62	-	dB
Dropout Voltage	V_{Drop}	I_O = 1A, T_J =+25°C		-	2.0	-	V
Output Resistance	r_O	f = 1KHz		-	17	-	mΩ
Short Circuit Current	I_{SC}	V_I= 35V, T_A =+25 °C		-	250	-	mA
Peak Current	I_{PK}	T_J=+25 °C		-	2.2	-	A

Note:

1. Load and line regulation are specified at constant junction temperature. Change in V_O due to heating effects must be taken into account separately. Pulse testing with low duty is used.

Electrical Characteristics (KA7812A)

(Refer to the test circuits. $0^oC < T_J < +125\ ^oC$, I_O =1A, V_I = 19V, C_I=0.33μF, C_O=0.1μF, unless otherwise specified)

Parameter	Symbol	Conditions		Min.	Typ.	Max.	Unit
Output Voltage	V_O	T_J =+25 °C		11.75	12	12.25	V
		I_O = 5mA to 1A, P_O ≤15W V_I = 14.8V to 27V		11.5	12	12.5	
Line Regulation (Note1)	Regline	V_I= 14.8V to 30V I_O = 500mA		-	10	120	mV
		V_I= 16V to 22V		-	4	120	
		T_J =+25 °C	V_I= 14.5V to 27V	-	10	120	
			V_I= 16V to 22V	-	3	60	
Load Regulation (Note1)	Regload	T_J =+25 °C I_O = 5mA to 1.5A		-	12	100	mV
		I_O = 5mA to 1.0A		-	12	100	
		I_O = 250mA to 750mA		-	5	50	
Quiescent Current	I_Q	T_J =+25°C		-	5.1	6.0	mA
Quiescent Current Change	ΔI_Q	V_I = 15V to 30V, T_J=+25 °C		-		0.8	mA
		V_I = 14V to 27V, I_O = 500mA		-		0.8	
		I_O = 5mA to 1.0A		-		0.5	
Output Voltage Drift	$\Delta V/\Delta T$	I_O = 5mA		-	-1.0	-	mV/°C
Output Noise Voltage	V_N	f = 10Hz to 100KHz T_A =+25°C		-	10	-	μV/Vo
Ripple Rejection	RR	f = 120Hz, I_O = 500mA V_I = 14V to 24V		-	60	-	dB
Dropout Voltage	V_{Drop}	I_O = 1A, T_J =+25°C		-	2.0	-	V
Output Resistance	r_O	f = 1KHz		-	18	-	mΩ
Short Circuit Current	I_{SC}	V_I= 35V, T_A =+25 °C		-	250	-	mA
Peak Current	I_{PK}	T_J=+25 °C		-	2.2	-	A

Note:

1. Load and line regulation are specified at constant junction temperature. Change in V_O due to heating effects must be taken into account separately. Pulse testing with low duty is used.

Electrical Characteristics (KA7815A)

(Refer to the test circuits. $0^oC < T_J < +125\ ^oC$, I_O =1A, V_I =23V, C_I=0.33μF, C_O=0.1μF, unless otherwise specified)

Parameter	Symbol	Conditions		Min.	Typ.	Max.	Unit
Output Voltage	V_O	T_J =+25 °C		14.7	15	15.3	V
		I_O = 5mA to 1A, P_O ≤15W V_I = 17.7V to 30V		14.4	15	15.6	
Line Regulation (Note1)	Regline	V_I= 17.9V to 30V I_O = 500mA		-	10	150	mV
		V_I= 20V to 26V		-	5	150	
		T_J =+25°C	V_I= 17.5V to 30V	-	11	150	
			V_I= 20V to 26V	-	3	75	
Load Regulation (Note1)	Regload	T_J =+25 °C I_O = 5mA to 1.5A		-	12	100	mV
		I_O = 5mA to 1.0A		-	12	100	
		I_O = 250mA to 750mA		-	5	50	
Quiescent Current	I_Q	T_J =+25 °C		-	5.2	6.0	mA
Quiescent Current Change	ΔI_Q	V_I = 17.5V to 30V, T_J =+25 °C		-	-	0.8	mA
		V_I = 17.5V to 30V, I_O = 500mA		-	-	0.8	
		I_O = 5mA to 1.0A		-	-	0.5	
Output Voltage Drift	$\Delta V/\Delta T$	I_O = 5mA		-	-1.0	-	mV/°C
Output Noise Voltage	V_N	f = 10Hz to 100KHz T_A =+25 °C		-	10	-	μV/Vo
Ripple Rejection	RR	f = 120Hz, I_O = 500mA V_I = 18.5V to 28.5V		-	58	-	dB
Dropout Voltage	V_{Drop}	I_O = 1A, T_J =+25 °C		-	2.0	-	V
Output Resistance	r_O	f = 1KHz		-	19	-	mΩ
Short Circuit Current	I_{SC}	V_I= 35V, T_A =+25 °C		-	250	-	mA
Peak Current	I_{PK}	T_J=+25°C		-	2.2	-	A

Note:

1. Load and line regulation are specified at constant junction temperature. Change in V_O due to heating effects must be taken into account separately. Pulse testing with low duty is used.

Electrical Characteristics (KA7818A)

(Refer to the test circuits. $0^oC < T_J < +125\ ^oC$, I_O =1A, V_I = 27V, C_I=0.33μF, C_O=0.1μF, unless otherwise specified)

Parameter	Symbol	Conditions		Min.	Typ.	Max.	Unit
Output Voltage	V_O	T_J =+25 °C		17.64	18	18.36	V
		I_O = 5mA to 1A, P_O ≤15W V_I = 21V to 33V		17.3	18	18.7	
Line Regulation (Note1)	Regline	V_I= 21V to 33V I_O = 500mA		-	15	180	mV
		V_I= 21V to 33V		-	5	180	
		T_J =+25 °C	V_I= 20.6V to 33V	-	15	180	
			V_I= 24V to 30V	-	5	90	
Load Regulation (Note1)	Regload	T_J =+25°C I_O = 5mA to 1.5A		-	15	100	mV
		I_O = 5mA to 1.0A		-	15	100	
		I_O = 250mA to 750mA		-	7	50	
Quiescent Current	I_Q	T_J =+25 °C		-	5.2	6.0	mA
Quiescent Current Change	ΔI_Q	V_I = 21V to 33V, T_J=+25 °C		-	-	0.8	mA
		V_I = 21V to 33V, I_O = 500mA		-	-	0.8	
		I_O = 5mA to 1.0A		-	-	0.5	
Output Voltage Drift	$\Delta V/\Delta T$	I_O = 5mA		-	-1.0	-	mV/ °C
Output Noise Voltage	V_N	f = 10Hz to 100KHz T_A =+25°C		-	10	-	μV/Vo
Ripple Rejection	RR	f = 120Hz, I_O = 500mA V_I = 22V to 32V		-	57	-	dB
Dropout Voltage	V_{Drop}	I_O = 1A, T_J =+25°C		-	2.0	-	V
Output Resistance	r_O	f = 1KHz		-	19	-	mΩ
Short Circuit Current	I_{SC}	V_I= 35V, T_A =+25°C		-	250	-	mA
Peak Current	I_{PK}	T_J=+25 °C		-	2.2	-	A

Note:

1. Load and line regulation are specified at constant junction temperature. Change in V_O due to heating effects must be taken into account separately. Pulse testing with low duty is used.

Electrical Characteristics (KA7824A)

(Refer to the test circuits. $0^oC < T_J < +125\ ^oC$, I_O =1A, V_I = 33V, C_I=0.33μF, C_O=0.1μF, unless otherwise specified)

Parameter	Symbol	Conditions		Min.	Typ.	Max.	Unit
Output Voltage	V_O	T_J =+25 °C		23.5	24	24.5	V
		I_O = 5mA to 1A, P_O ≤15W V_I = 27.3V to 38V		23	24	25	
Line Regulation (Note1)	Regline	V_I= 27V to 38V I_O = 500mA		-	18	240	mV
		V_I= 21V to 33V		-	6	240	
		T_J =+25 °C	V_I= 26.7V to 38V	-	18	240	
			V_I= 30V to 36V	-	6	120	
Load Regulation (Note1)	Regload	T_J =+25 °C I_O = 5mA to 1.5A		-	15	100	mV
		I_O = 5mA to 1.0A		-	15	100	
		I_O = 250mA to 750mA		-	7	50	
Quiescent Current	I_Q	T_J =+25 °C		-	5.2	6.0	mA
Quiescent Current Change	ΔI_Q	V_I = 27.3V to 38V, T_J =+25 °C		-	-	0.8	mA
		V_I = 27.3V to 38V, I_O = 500mA		-	-	0.8	
		I_O = 5mA to 1.0A		-	-	0.5	
Output Voltage Drift	$\Delta V/\Delta T$	I_O = 5mA		-	-1.5	-	mV/ °C
Output Noise Voltage	V_N	f = 10Hz to 100KHz T_A = 25 °C		-	10	-	μV/Vo
Ripple Rejection	RR	f = 120Hz, I_O = 500mA V_I = 28V to 38V		-	54	-	dB
Dropout Voltage	V_{Drop}	I_O = 1A, T_J =+25 °C		-	2.0	-	V
Output Resistance	r_O	f = 1KHz		-	20	-	mΩ
Short Circuit Current	I_{SC}	V_I= 35V, T_A =+25 °C		-	250	-	mA
Peak Current	I_{PK}	T_J=+25 °C		-	2.2	-	A

Note:

1. Load and line regulation are specified at constant junction temperature. Change in V_O due to heating effects must be taken into account separately. Pulse testing with low duty is used.

Typical Perfomance Characteristics

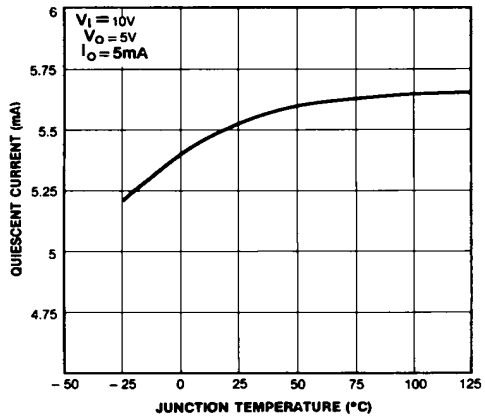

Figure 1. Quiescent Current

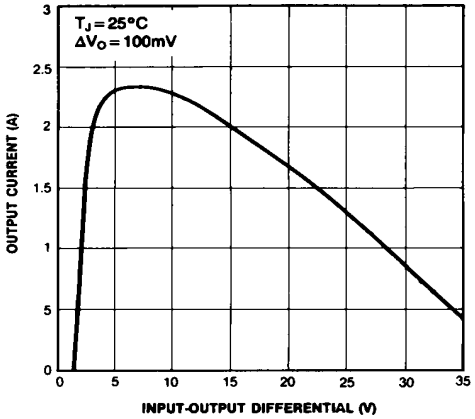

Figure 2. Peak Output Current

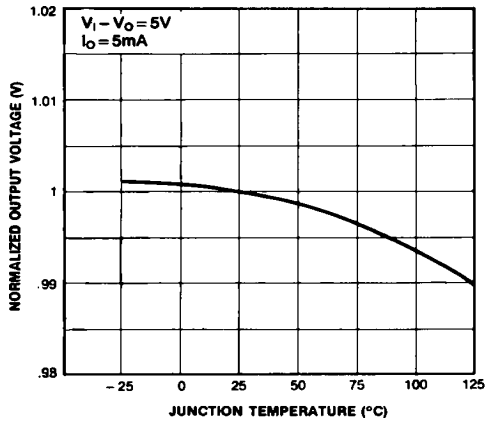

Figure 3. Output Voltage

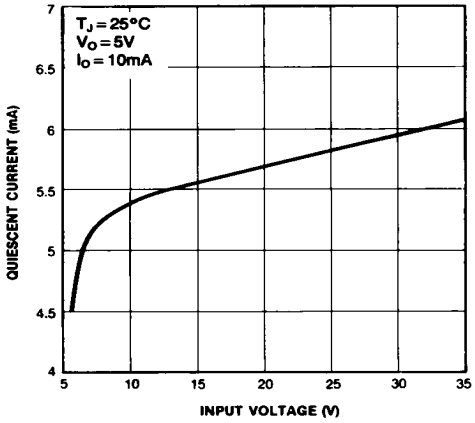

Figure 4. Quiescent Current

Typical Applications

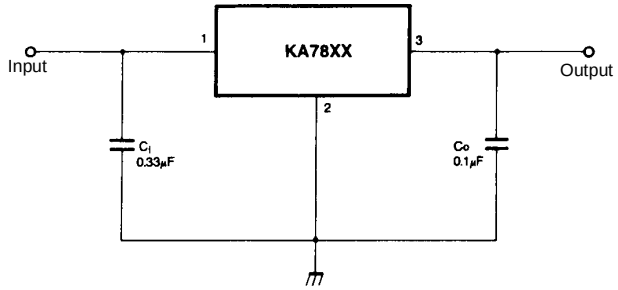

Figure 5. DC Parameters

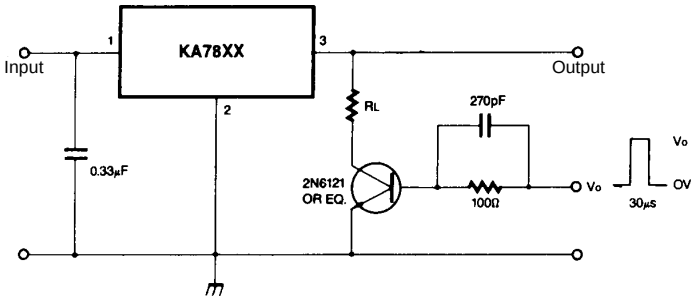

Figure 6. Load Regulation

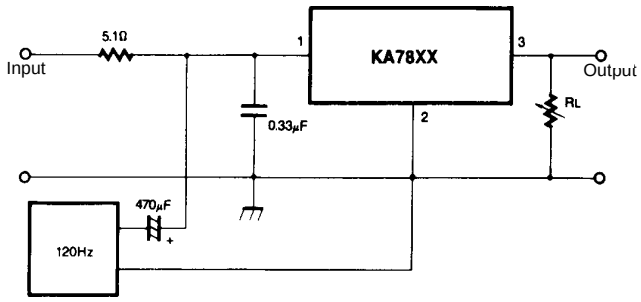

Figure 7. Ripple Rejection

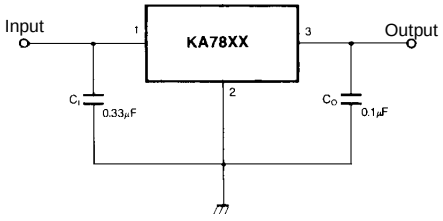

Figure 8. Fixed Output Regulator

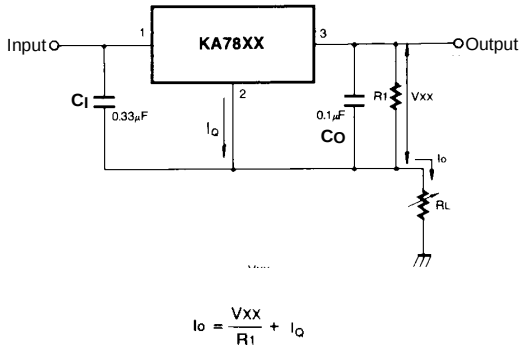

$$I_O = \frac{V_{XX}}{R_1} + I_Q$$

Figure 9. Constant Current Regulator

Notes:

(1) To specify an output voltage. substitute voltage value for "XX." A common ground is required between the input and the Output voltage. The input voltage must remain typically 2.0V above the output voltage even during the low point on the input ripple voltage.

(2) C_I is required if regulator is located an appreciable distance from power Supply filter.

(3) C_O improves stability and transient response.

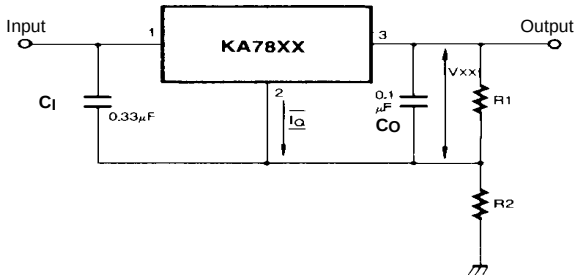

$$I_{RI} \geq 5IQ$$

$$V_O = V_{XX}(1+R_2/R_1)+I_QR_2$$

Figure 10. Circuit for Increasing Output Voltage

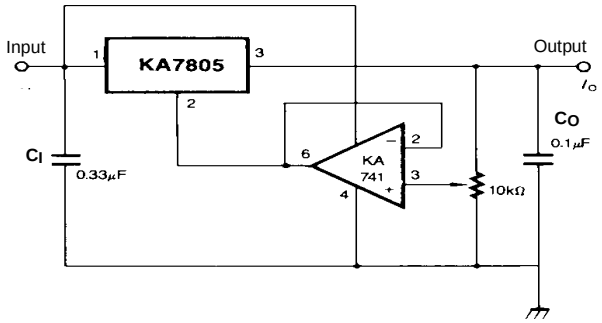

$$I_{RI} \geq 5\ I_Q$$

$$V_O = V_{XX}(1+R_2/R_1)+I_QR_2$$

Figure 11. Adjustable Output Regulator (7 to 30V)

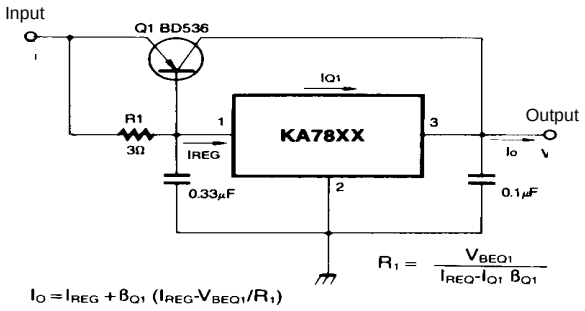

Figure 12. High Current Voltage Regulator

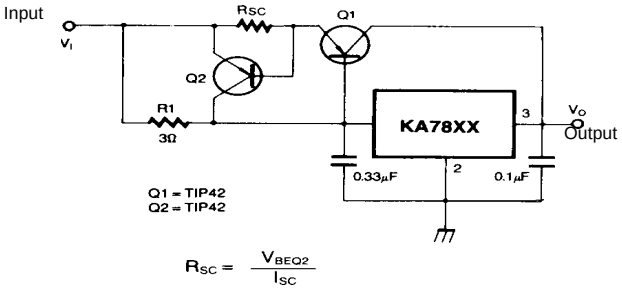

Figure 13. High Output Current with Short Circuit Protection

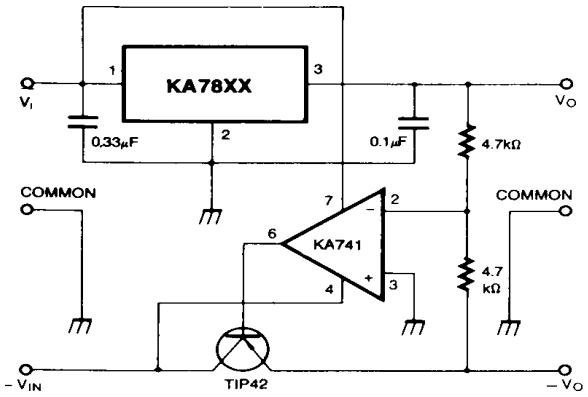

Figure 14. Tracking Voltage Regulator

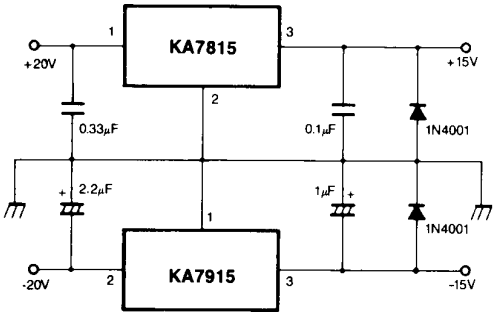

Figure 15. Split Power Supply (±15V-1A)

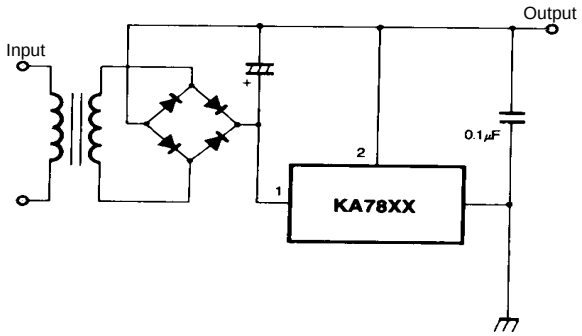

Figure 16. Negative Output Voltage Circuit

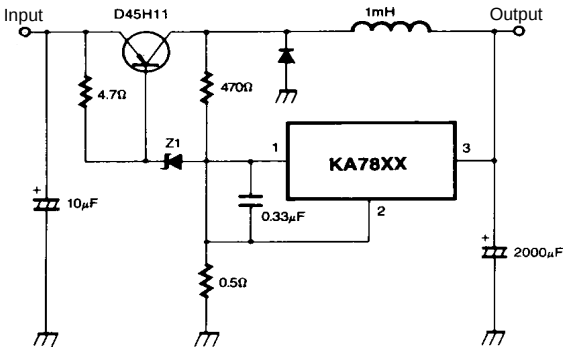

Figure 17. Switching Regulator

Mechanical Dimensions

Package

TO-220

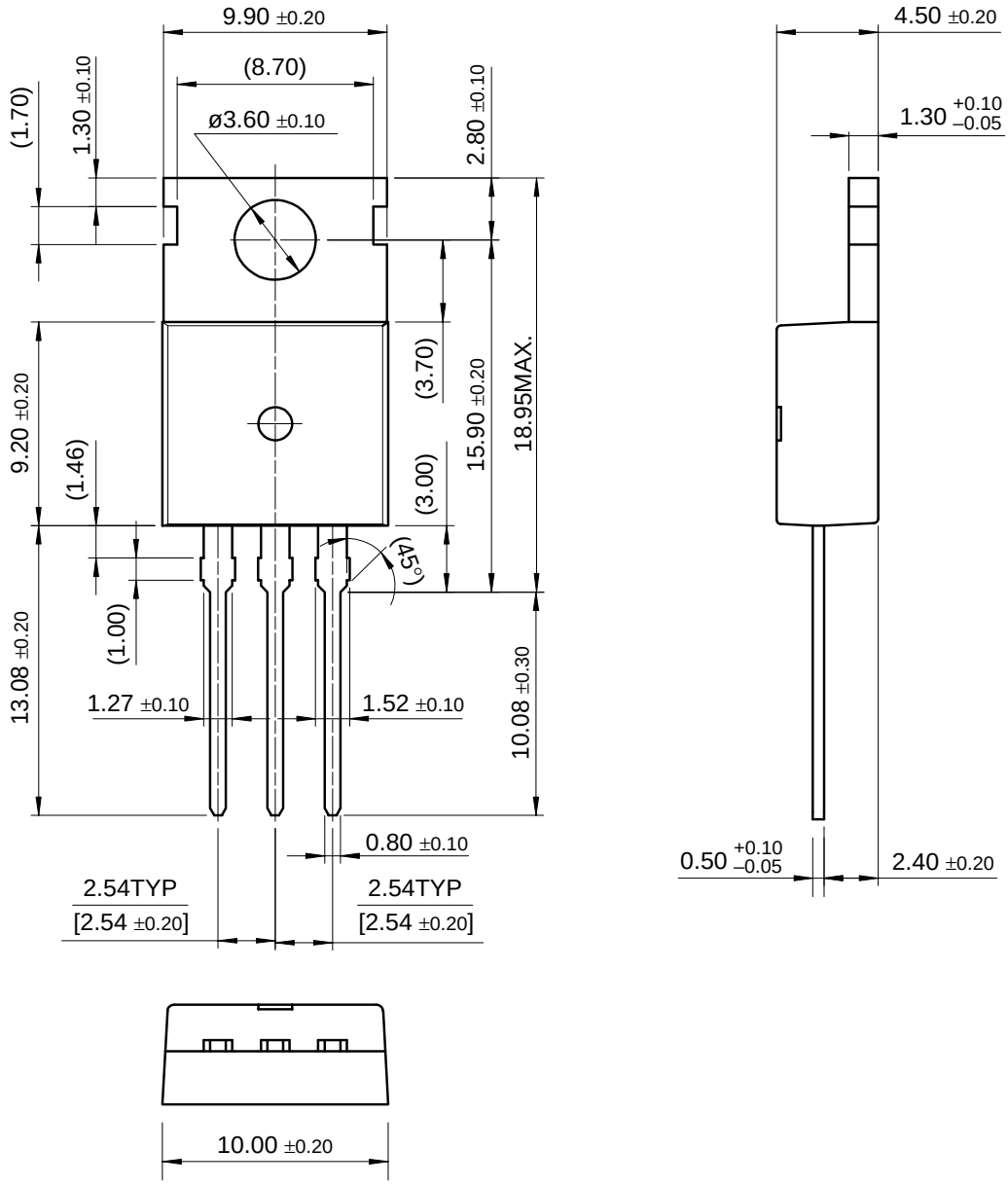

Mechancal Dimensions (Continued)

Package

D-PAK

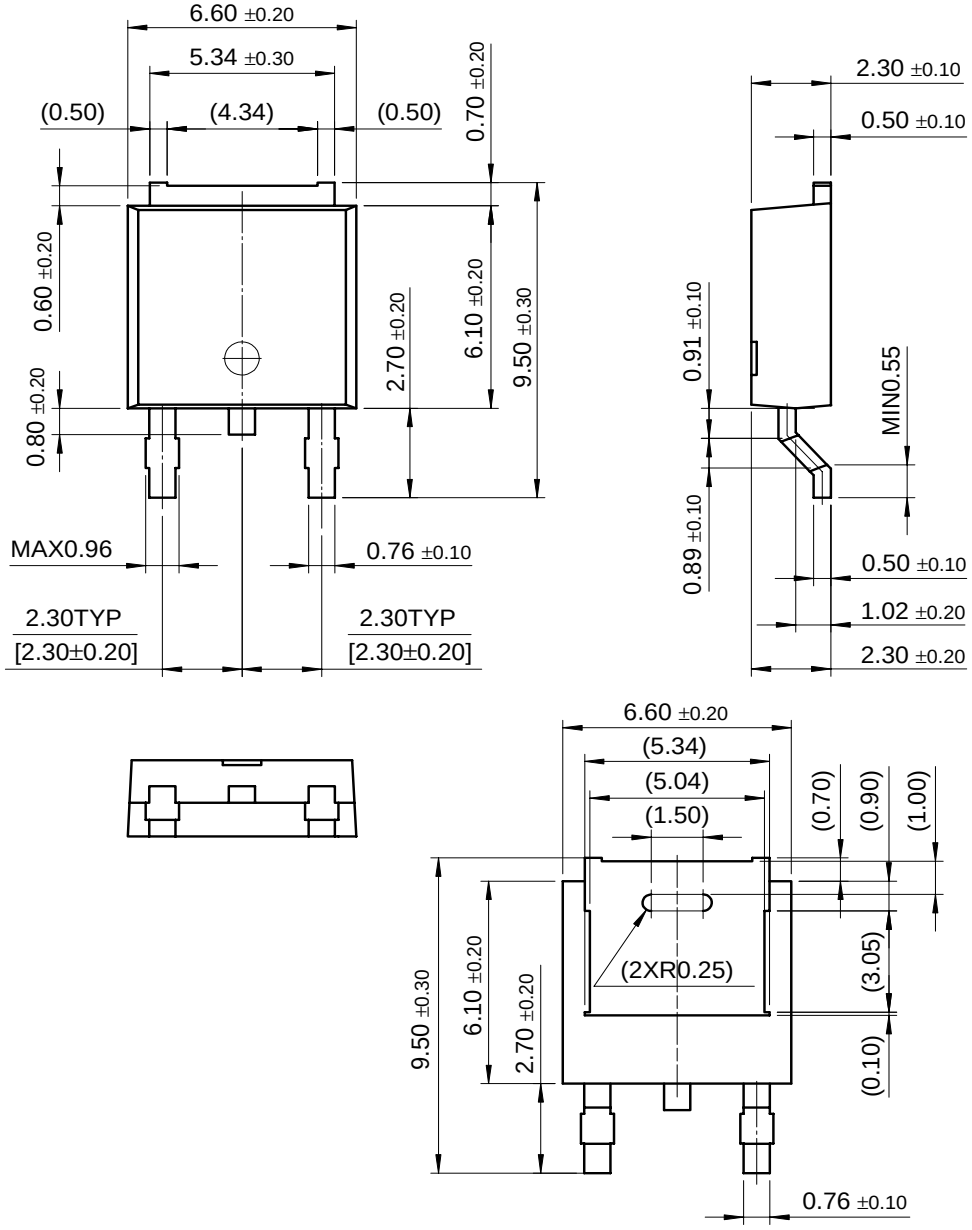

Ordering Information

Product Number	Output Voltage Tolerance	Package	Operating Temperature
KA7805 / KA7806	±4%	TO-220	0 ~ + 125°C
KA7808 / KA7809			
KA7810			
KA7812 / KA7815			
KA7818 / KA7824			
KA7805A / KA7806A	±2%		
KA7808A / KA7809A			
KA7810A / KA7812A			
KA7815A / KA7818A			
KA7824A			
KA7805R / KA7806R	±4%	D-PAK	
KA7808R / KA7809R			
KA7812R			

DISCLAIMER

FAIRCHILD SEMICONDUCTOR RESERVES THE RIGHT TO MAKE CHANGES WITHOUT FURTHER NOTICE TO ANY PRODUCTS HEREIN TO IMPROVE RELIABILITY, FUNCTION OR DESIGN. FAIRCHILD DOES NOT ASSUME ANY LIABILITY ARISING OUT OF THE APPLICATION OR USE OF ANY PRODUCT OR CIRCUIT DESCRIBED HEREIN; NEITHER DOES IT CONVEY ANY LICENSE UNDER ITS PATENT RIGHTS, NOR THE RIGHTS OF OTHERS.

LIFE SUPPORT POLICY

FAIRCHILD'S PRODUCTS ARE NOT AUTHORIZED FOR USE AS CRITICAL COMPONENTS IN LIFE SUPPORT DEVICES OR SYSTEMS WITHOUT THE EXPRESS WRITTEN APPROVAL OF THE PRESIDENT OF FAIRCHILD SEMICONDUCTOR CORPORATION. As used herein:

1. Life support devices or systems are devices or systems which, (a) are intended for surgical implant into the body, or (b) support or sustain life, and (c) whose failure to perform when properly used in accordance with instructions for use provided in the labeling, can be reasonably expected to result in a significant injury of the user.
2. A critical component in any component of a life support device or system whose failure to perform can be reasonably expected to cause the failure of the life support device or system, or to affect its safety or effectiveness.

6/1/01 0.0m 001
Stock#DSxxxxxxxx
© 2001 Fairchild Semiconductor Corporation

This datasheet has been downloaded from:

www.DatasheetCatalog.com

Datasheets for electronic components.

littlediode
COMPONENTS FOR ALL

Littlediode supplies new, hard to find or obsolete electronic components and semiconductors all over the world.

With over two million different components listed you are sure to find the part you need.

Feel free to visit us today at our online store:

LittleDiode.com

Looking forward to providing you with the best possible service.