HA17451AP/AFP

Switching Regulator Controllers for DC/DC Converters

HITACHI

ADE-204-057 (Z)
Rev. 0
Dec. 2000

Description

The HA17451 is a dual-channel switching regulator controller IC. Each channel contains the basic circuits for controlling a PWM-type switching-regulator power supply. Both channels are integrated onto the same chip. Both channels can be completely synchronized, using the same oscillator output waveform. Each channel can provide output voltages for step-up, step-down, inverting, and other converter topologies.

These controllers operate at voltages from 3.3 V to 40 V, making them suitable for a wide range of applications. They are ideal for chopper-type DC/DC converters. They are similar to the TL1451, but note that the HA17451A differs from the TL1451A.

Functions

- Low-dropout 2.5V voltage reference
- Undervoltage lockout
- Triangle-wave oscillator
- Adjustable dead-time control
- Error amplifier
- Output driver (open-collector transistor type)
- PWM comparator

Hitachi semiconductor

Features

- Low dropout voltage of on-chip 2.5V voltage reference: Vdrop = 0.2 V (typ)
- Operates throughout wide supply voltagerange: 3.3 V to 40 V
- Large maximum output current: 50 mA (max)
- Undervoltage lockout circuit
  High threshold voltage: 3.15 V (typ)
  Low threshold voltage: 2.98 V (typ)
- Low current drain: 1.5 mA (typ)
- Operates at wide range of oscillator frequencies: f_{OSC} = 1 kHz to 300 kHz
- Dead time adjustable through full duty cycle range
- Surface-mount package (SOP16) for saving space (HA17451AFP)

Ordering Information

Type Name	Package
HA17451AP	DP-16
HA17451AFP	FP-16DA

Pin Arrangement

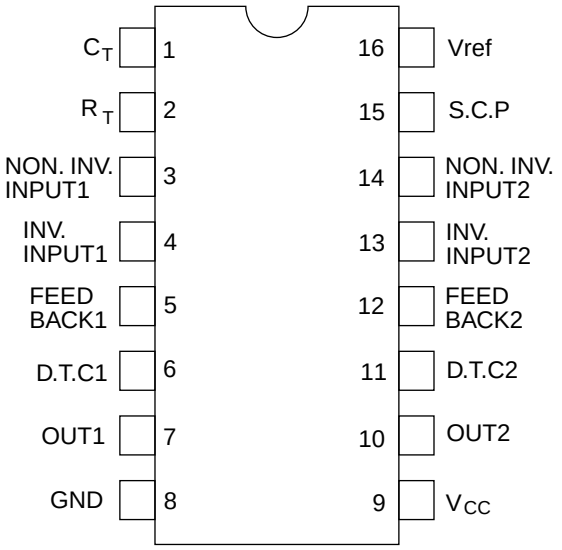

(Top view)

Pin Functions

Pin No.	Symbols	Functions
1	C_T	Timing capacitor
2	R_T	Timing resistor
3, 14	NON. INV. INPUT	Non-inverting input of error amp
4, 13	INV. INPUT	Inverting input of error amp
5, 12	FEEDBACK	Output of error amp
6, 11	D.T.C	Dead time control
7, 10	OUT	Output
8	GND	Ground
9	V_{CC}	Input voltage
15	S.C.P	Short circuit protection
16	Vref	Reference voltage output

Block Diagram

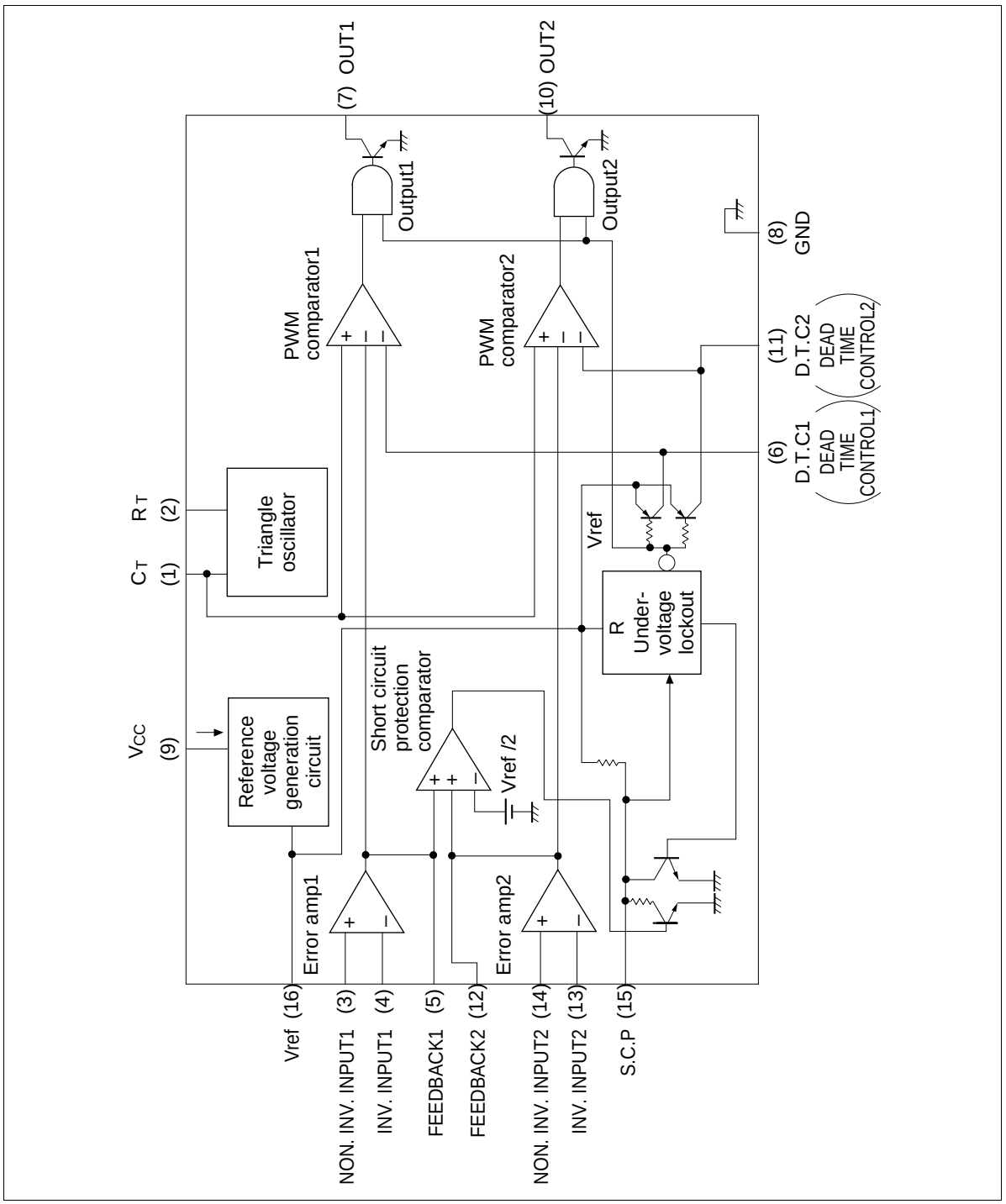

Short-circuit Protection in HA17451A

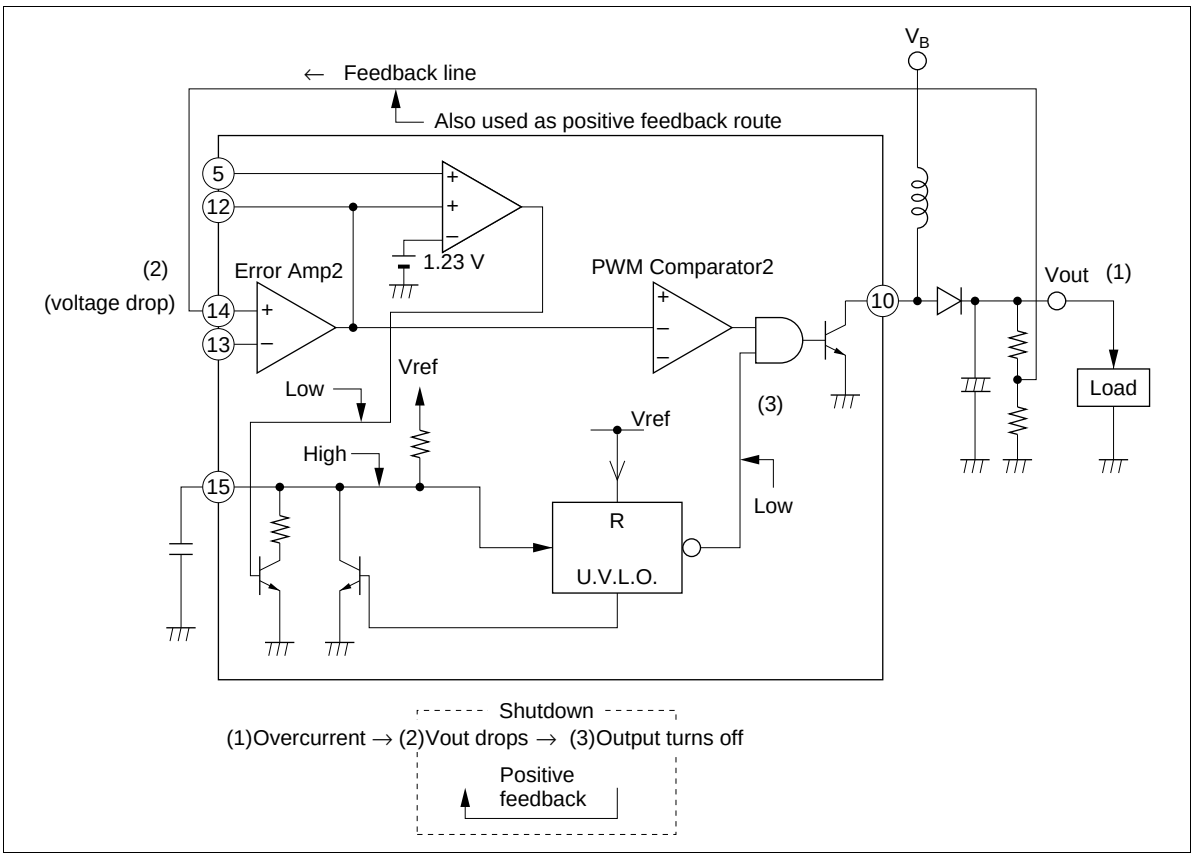

Absolute Maximum Ratings (Ta = 25°C)

Item	Symbol	Rating	Unit	Note
Power supply voltage	V_{CC}	40	V	
Error amplifier input voltage	V_I	20	V	
Collector output voltage	V_O	40	V	
Collector output current	I_O	50	mA	
Power dissipation	P_T	680	mW	*
Operating temperature	Topr	– 20 to +85	°C	
Storage temperature	Tstg	– 55 to +125	°C	

Note: This value applies to the HA17451AP at ambient temperatures up to Ta = 45°C. Derate by8.3 mW/°C above that point.

Electrical Characteristics (Ta = 25°C, V_{CC} = 6 V, f_{OSC} = 200 kHz)

Reference Section

Item	Symbol	Min	Typ	Max	Unit	Test Conditions
Output voltage	Vref	2.40	2.50	2.60	V	I_O = 1 mA
Voltage drop	Vdrop	—	0.2	0.35	V	I_O = 1 mA
Line regulation	Line	—	2	12.5	mV	V_{CC} = 3.0 to 40 V
Load regulation	Load	—	1	7.5	mV	I_O = 0.1 to 1 mA
Maximum output current	I_{OMAX}	3	10	30	mA	Vref = 0.5 V
Reverse voltage state minimum current	I_{OR}	18	—	—	µA	– 0.2 V < Vref < 0 V

Undervoltage Lockout Protection Section

Item	Symbol	Min	Typ	Max	Unit	Test Conditions
High level threshold	Vth	2.90	3.15	3.30	V	I_O = 0.1 mA
Low level threshold	Vtl	2.75	2.98	3.15	V	I_O = 0.1 mA
Hysteresis width	V_{HYS}	100	170	—	mV	I_O = 0.1 mA
Reset voltage	V_R	1.5	1.9	—	V	I_O = 0.1 mA

Protection Section

Item	Symbol	Min	Typ	Max	Unit	Test Conditions
Input threshold	V_{TPC}	0.56	0.61	0.66	V	
Input standby voltage	V_{STBY}	140	185	230	mV	No pull up
Input source current	Ibpc	10	15	20	µA	
Comparator threshold voltage	Vtc	—	1.23	—	V	Pins 5 and 12

Oscillator Section

Item	Symbol	Min	Typ	Max	Unit	Test Conditions
Frequency	f_{OSC}	—	200	—	kHz	C_T = 330 pF, R_T = 10 kΩ
Initial accuracy	f_{dev}	—	10	—	%	
Voltage stability	f_{dv}	—	1	—	%	

Electrical Characteristics (Ta = 25°C, V_{CC} = 6 V, f_{OSC} = 200 kHz) (cont)

Dead Time Control Section

Item	Symbol	Min	Typ	Max	Unit	Test Conditions
Input threshold voltage	Vt0	—	2.05	2.25	V	f_{OSC} = 10 kHz Duty cycle = 0%
Input threshold voltage	Vt100	1.20	1.45	—	V	f_{OSC} = 10 kHz Duty cycle = 100%

Error Amp Section

Item	Symbol	Min	Typ	Max	Unit	Test Conditions
Input offset voltage	V_{IO}	– 6	—	6	mV	V_O (pin 5, 12) = 1.25 V
Input offset current	I_{IO}	–100	—	100	nA	V_O (pin 5, 12) = 1.25 V
Input bias current	I_B	—	160	500	nA	V_O (pin 5, 12) = 1.25 V
Common mode input voltage range	V_{ICR}	1.0	—	1.45	V	V_{CC} = 3.3 to 40 V
Open loop gain	A_V	70	80	—	dB	R_{NF} = 200 kΩ*
Band width	GB	—	2.5	—	MHz	
Common mode rejection ratio	CMRR	40	60	—	dB	
Maximum output voltage	V_{OM+}	Vref – 0.15	—	—	V	
	V_{OM-}	—	—	1.0		
Output sink current	I_{OM+}	0.5	1.6	—	mA	V_O = 1.25 V
Output source current	I_{OM-}	—	–70	–45	µA	V_O = 1.25 V

Note: R_{NF} is connected between pin 4 and 5 for channel 1, pin 12 and 13 for channel 2.

Output Section

Item	Symbol	Min	Typ	Max	Unit	Test Conditions
Collector off-state current (1)	I_{Leak} (1)	—	—	10	µA	V_O = 40 V
Collector off-state current (2)	I_{Leak} (2)	—	—	10	µA	V_O = 40 V V_{CC} = Open
Saturation voltage	Vsat	—	1.2	2	V	I_O = 10 mA

PWM Comparator Section

Item	Symbol	Min	Typ	Max	Unit	Test Conditions
Input threshold voltage	Vt0	—	2.05	2.25	V	f_{OSC} = 10 kHz Duty cycle = 0%
Input threshold voltage	Vt100	1.20	1.45	—	V	f_{OSC} = 10 kHz Duty cycle = 100%
Input sink current	Isink	0.5	1.6	—	mA	V_O (pin 5, 12) = 1.25 V
Input source current	Isource	—	–70	–45	µA	V_O (pin 5, 12) = 1.25 V

Total Current

Item	Symbol	Min	Typ	Max	Unit	Test Conditions
Standby current	Iccs	—	1.5	2.0	mA	Output off-state
Average supply current	Icca	—	1.9	2.6	mA	R_T = 10 kΩ S_{CP} (pin 15) = 0 V

Test Circuit

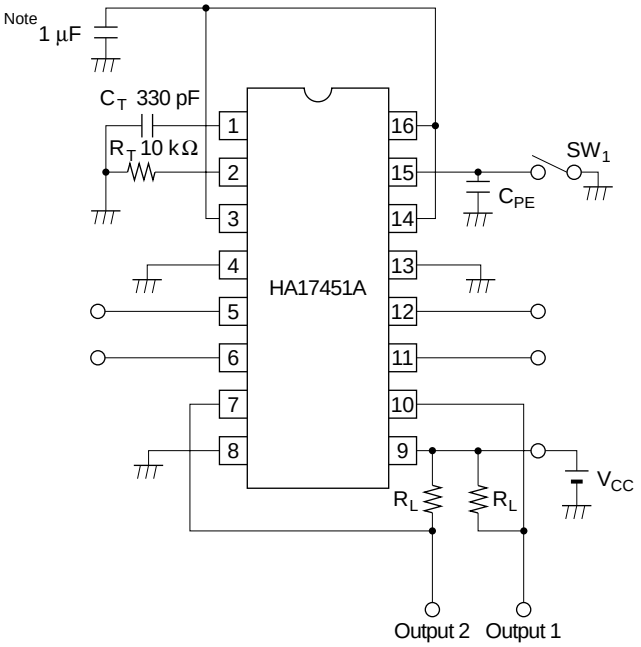

Note: Connect a phase compensating capacitor (at least 1 µF) to Vref.

Characteristic Curves

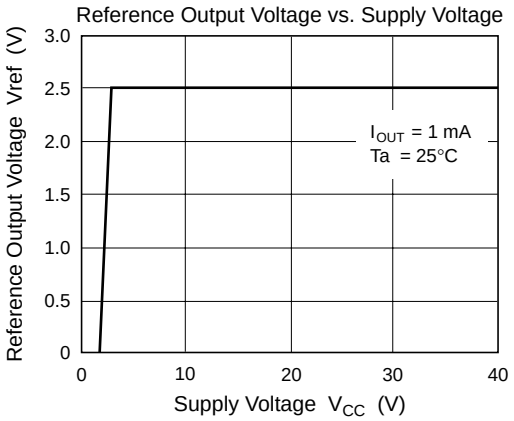

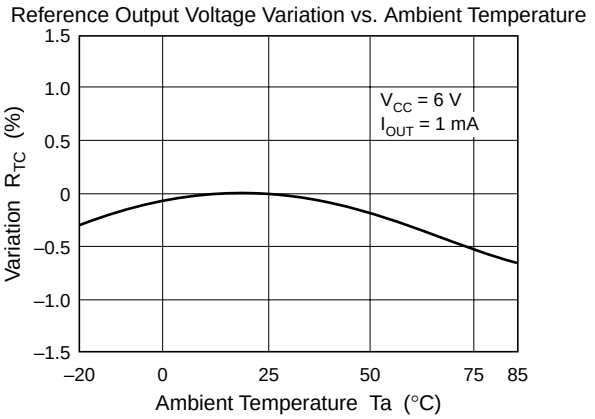

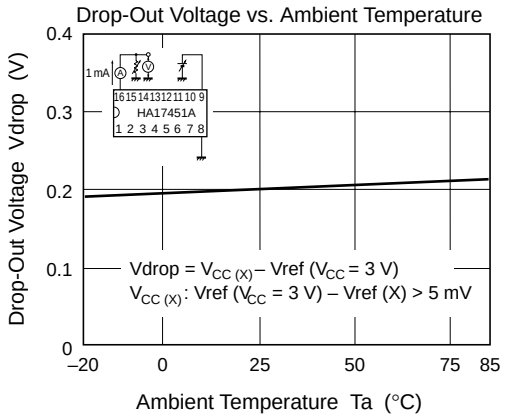

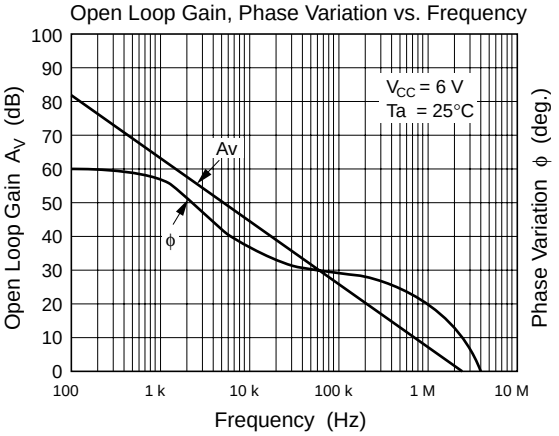

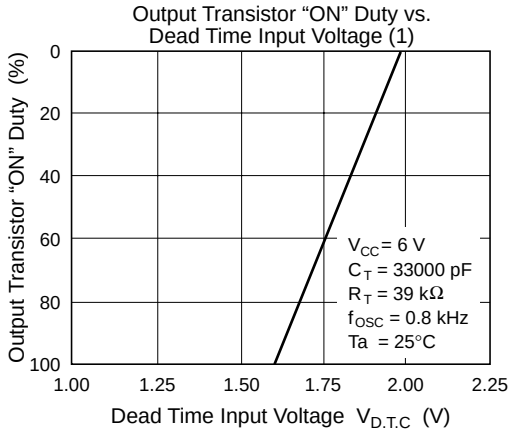

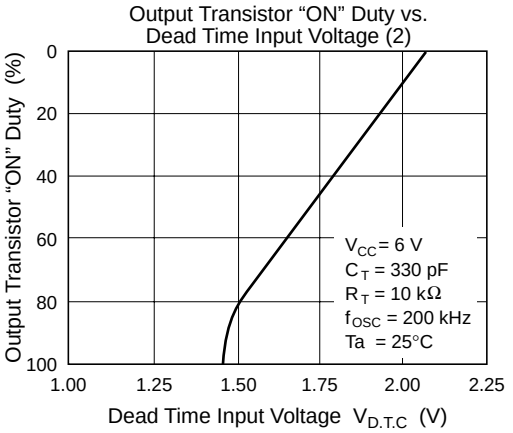

Oscillator Frequency Variation vs. Ambient Temperature

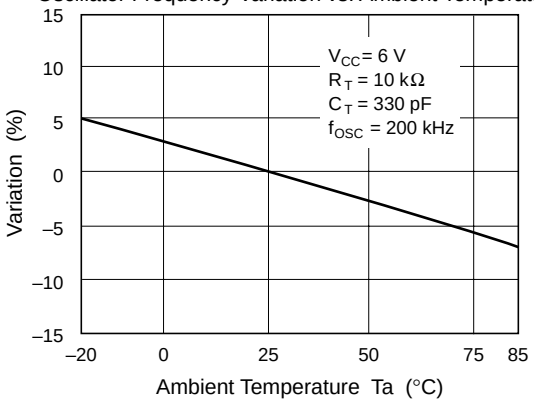

Oscillator Frequency vs. Timing Resistance

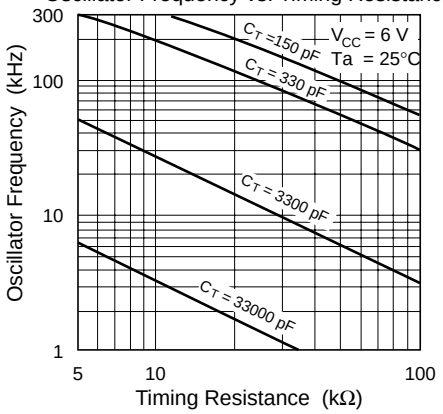

Standby Current vs. Supply Voltage

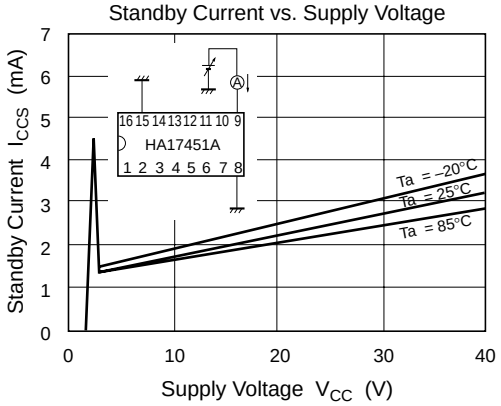

Undervoltage Lockout Threshold Voltage vs. Ambient Temperature

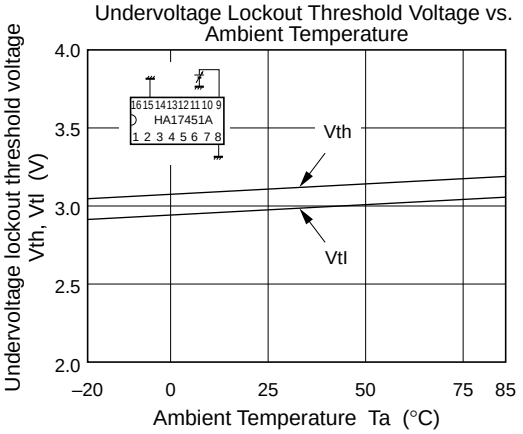

t_r, t_f vs. I_O

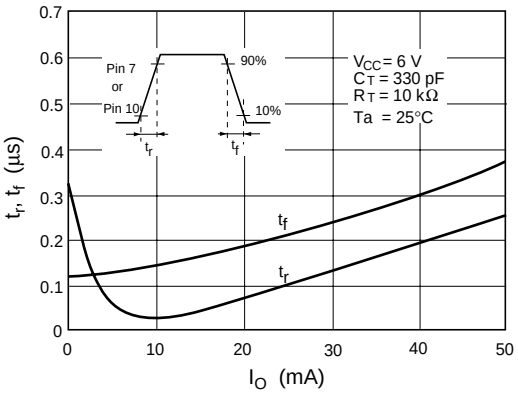

Timing Waveforms

• Internal waveform timing diagram

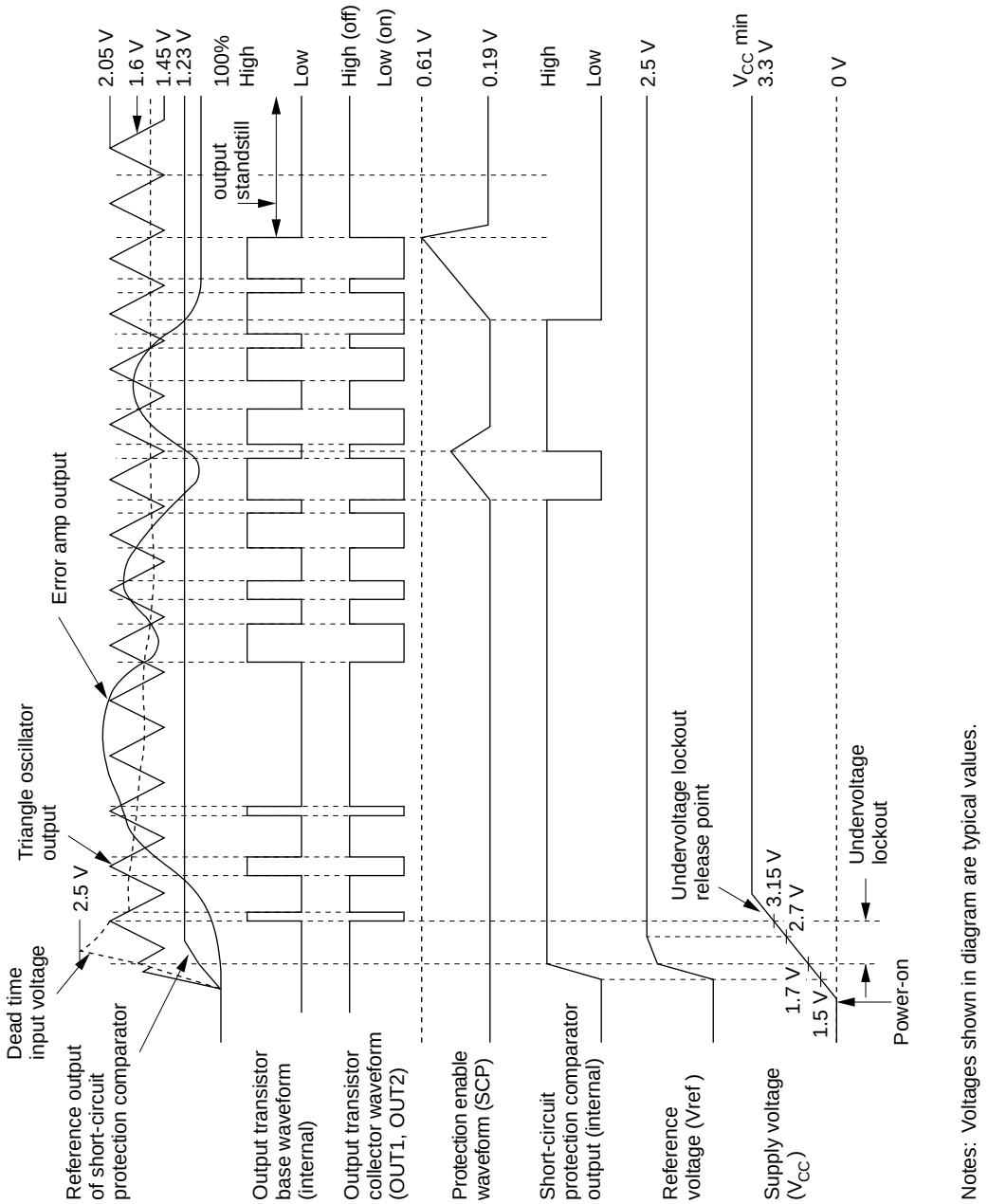

Typical System Configurations

• Dual-output DC/DC converter

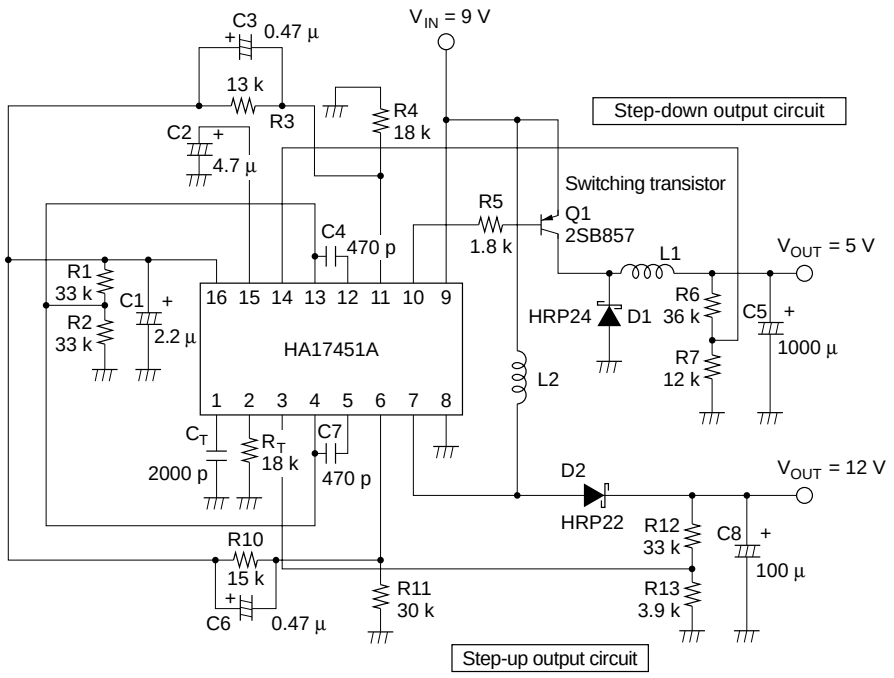

Step-up output circuit
(using transistor in IC as switching element)

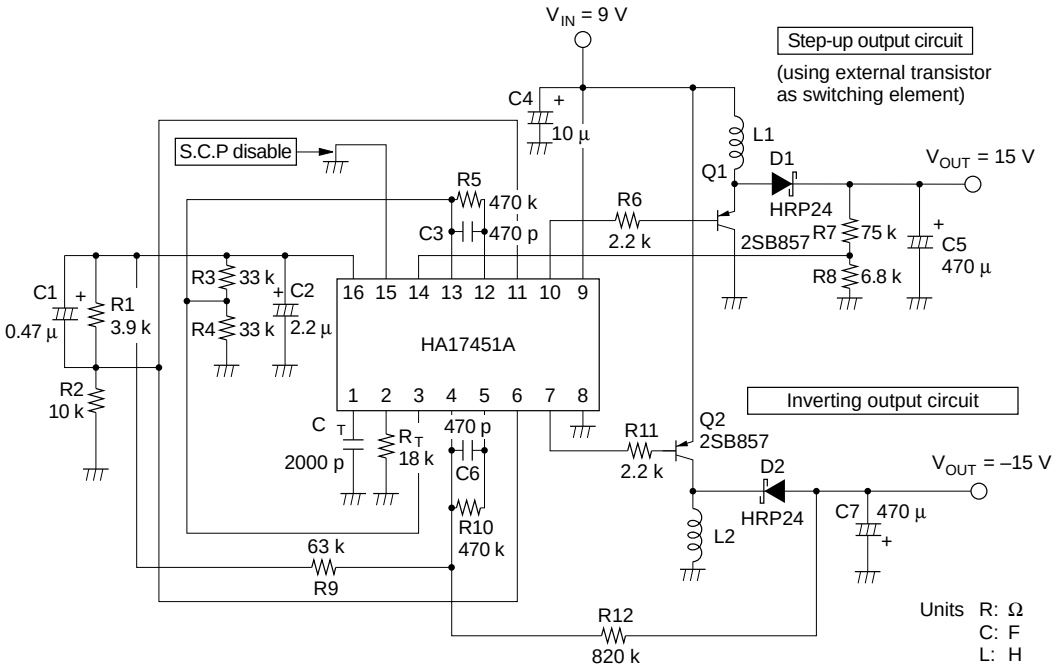

Precautions

Precaution concerning inverting (negative voltage) output

Circuit diagram

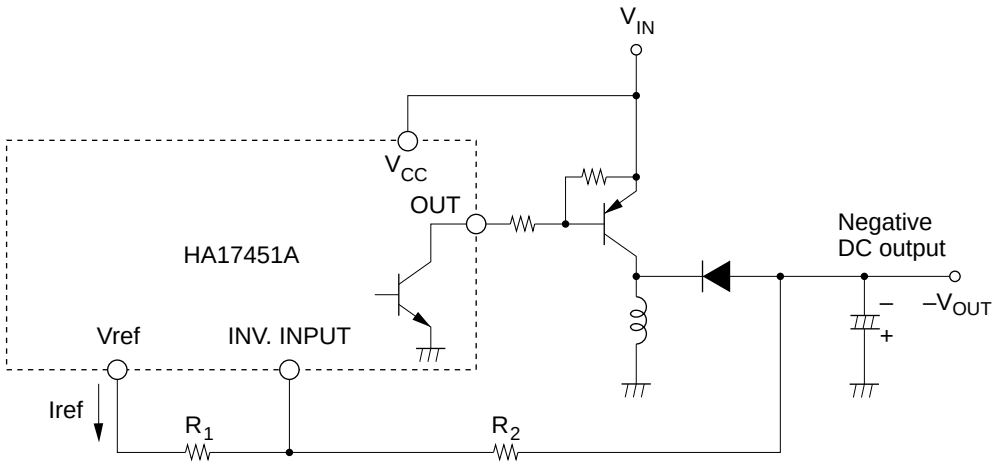

Conditions

To prevent leakage current in the IC from interfering with stable and efficient operation, choose R_1 and R_2 values that satisfy the following condition:

$$R_1 + R_2 > \frac{|V_{OUT}|\ V}{18\ \mu A}$$

where, R_1, R_2 : Feedback voltage resistors
$|V_{OUT}|$: Absolute value of negative output voltage
18 μA: Minimum current with negative voltage at reference voltage pin; I_{OR} (min)

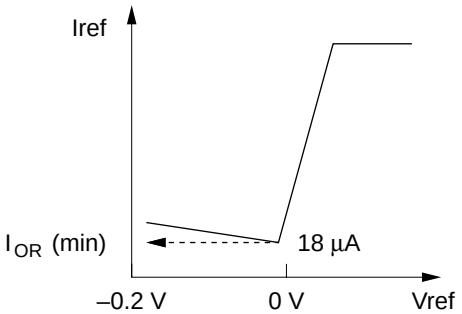

Package Dimensions

Unit: mm

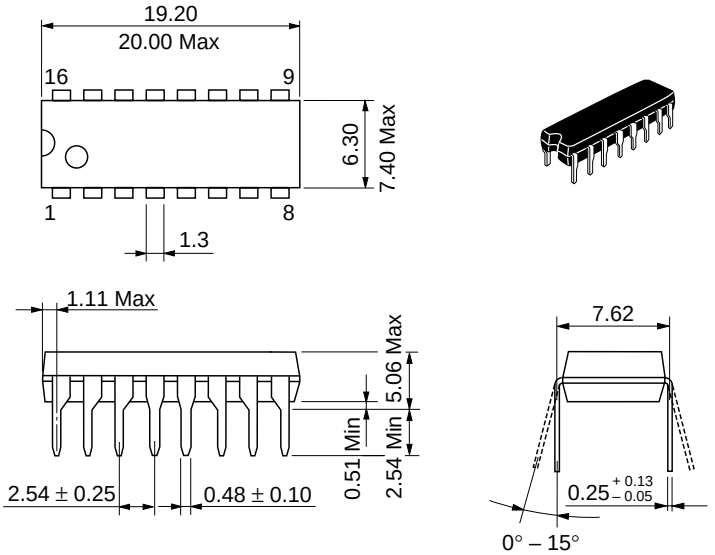

Hitachi Code	DP-16
JEDEC	Conforms
EIAJ	Conforms
Mass (reference value)	1.07 g

Unit: mm

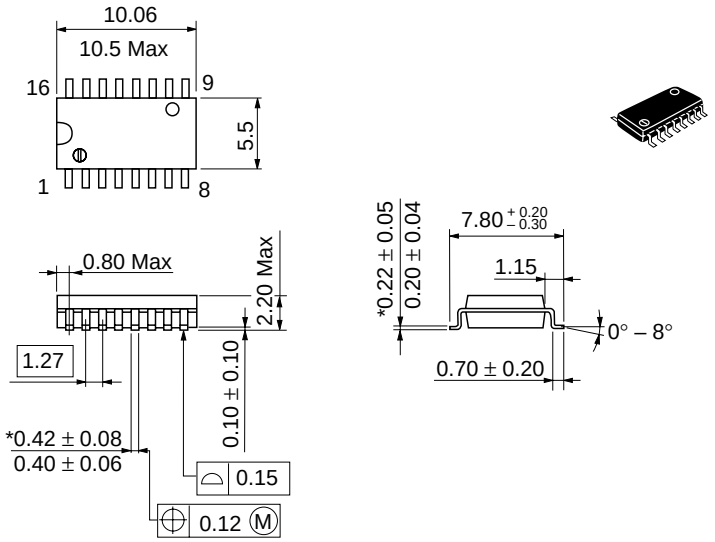

*Dimension including the plating thickness / Base material dimension

Hitachi Code	FP-16DA
JEDEC	—
EIAJ	Conforms
Mass (reference value)	0.24 g

Cautions

1. Hitachi neither warrants nor grants licenses of any rights of Hitachi's or any third party's patent, copyright, trademark, or other intellectual property rights for information contained in this document. Hitachi bears no responsibility for problems that may arise with third party's rights, including intellectual property rights, in connection with use of the information contained in this document.
2. Products and product specifications may be subject to change without notice. Confirm that you have received the latest product standards or specifications before final design, purchase or use.
3. Hitachi makes every attempt to ensure that its products are of high quality and reliability. However, contact Hitachi's sales office before using the product in an application that demands especially high quality and reliability or where its failure or malfunction may directly threaten human life or cause risk of bodily injury, such as aerospace, aeronautics, nuclear power, combustion control, transportation, traffic, safety equipment or medical equipment for life support.
4. Design your application so that the product is used within the ranges guaranteed by Hitachi particularly for maximum rating, operating supply voltage range, heat radiation characteristics, installation conditions and other characteristics. Hitachi bears no responsibility for failure or damage when used beyond the guaranteed ranges. Even within the guaranteed ranges, consider normally foreseeable failure rates or failure modes in semiconductor devices and employ systemic measures such as fail-safes, so that the equipment incorporating Hitachi product does not cause bodily injury, fire or other consequential damage due to operation of the Hitachi product.
5. This product is not designed to be radiation resistant.
6. No one is permitted to reproduce or duplicate, in any form, the whole or part of this document without written approval from Hitachi.
7. Contact Hitachi's sales office for any questions regarding this document or Hitachi semiconductor products.

HITACHI

Hitachi, Ltd.
Semiconductor & Integrated Circuits.
Nippon Bldg., 2-6-2, Ohte-machi, Chiyoda-ku, Tokyo 100-0004, Japan
Tel: Tokyo (03) 3270-2111 Fax: (03) 3270-5109

URL
NorthAmerica : http://semiconductor.hitachi.com/
Europe : http://www.hitachi-eu.com/hel/ecg
Asia : http://sicapac.hitachi-asia.com
Japan : http://www.hitachi.co.jp/Sicd/indx.htm

For further information write to:

Hitachi Semiconductor (America) Inc.
179 East Tasman Drive,
San Jose,CA 95134
Tel: <1> (408) 433-1990
Fax: <1>(408) 433-0223

Hitachi Europe GmbH
Electronic Components Group
Dornacher Straβe 3
D-85622 Feldkirchen, Munich
Germany
Tel: <49> (89) 9 9180-0
Fax: <49> (89) 9 29 30 00

Hitachi Europe Ltd.
Electronic Components Group.
Whitebrook Park
Lower Cookham Road
Maidenhead
Berkshire SL6 8YA, United Kingdom
Tel: <44> (1628) 585000
Fax: <44> (1628) 585160

Hitachi Asia Ltd.
Hitachi Tower
16 Collyer Quay #20-00,
Singapore 049318
Tel : <65>-538-6533/538-8577
Fax : <65>-538-6933/538-3877
URL : http://www.hitachi.com.sg

Hitachi Asia Ltd.
(Taipei Branch Office)
4/F, No. 167, Tun Hwa North Road,
Hung-Kuo Building,
Taipei (105), Taiwan
Tel : <886>-(2)-2718-3666
Fax : <886>-(2)-2718-8180
Telex : 23222 HAS-TP
URL : http://www.hitachi.com.tw

Hitachi Asia (Hong Kong) Ltd.
Group III (Electronic Components)
7/F., North Tower,
World Finance Centre,
Harbour City, Canton Road
Tsim Sha Tsui, Kowloon,
Hong Kong
Tel : <852>-(2)-735-9218
Fax : <852>-(2)-730-0281
URL : http://www.hitachi.com.hk

Copyright © Hitachi, Ltd., 2000. All rights reserved. Printed in Japan.
Colophon 2.0

Littlediode supplies new, hard to find or obsolete electronic components and semiconductors all over the world.

With over two million different components listed you are sure to find the part you need.

Feel free to visit us today at our online store:

LittleDiode.com

Looking forward to providing you with the best possible service.