HA4404B

330MHz, 4 x 1 Video Crosspoint Switch with Tally Outputs

July 1998

Features

- **Low Power Dissipation 105mW**
- **Symmetrical Slew Rates 1250V/µs**
- **0.1dB Gain Flatness. 165MHz**
- **-3dB Bandwidth 330MHz**
- **Off Isolation (100MHz) 70dB**
- **Crosstalk Rejection (30MHz). 80dB**
- **Differential Gain and Phase . . . . . 0.01%/0.01 Degrees**
- **High ESD Rating . . . . . >2000V**
- **TTL Compatible Control Inputs**
- **Open Collector Tally Outputs**
- **Improved Replacement for GX4404**

Applications

- **Professional Video Switching and Routing**
- **HDTV**
- **Computer Graphics**
- **RF Switching and Routing**

Description

The HA4404B is a very wide bandwidth 4 x 1 crosspoint switch ideal for professional video switching, HDTV, computer monitor routing, and other high performance applications. The circuit features very low power dissipation (105mW Enabled, 4mW Disabled), excellent differential gain and phase, and very high off isolation. When disabled, the output is switched to a high impedance state, making the HA4404B ideal for routing matrix equipment.

The HA4404B requires no external current source, and features fast switching and symmetric slew rates. The tally outputs are open collector PNP transistors to V+ to provide an indication of crosspoint selection.

For a 4 x 1 crosspoint without Tally outputs or with synchronous control signals, please refer to the HA4314B and HA4344B Data Sheets, respectively.

Ordering Information

PART NUMBER	TEMP. RANGE (^{o}C)	PACKAGE	PKG. NO.
HA4404BCB	0 to 70	16 Ld SOIC	M16.15
HA4404BCB96	0 to 70	16 Ld SOIC Tape and Reel	M16.15

Pinout

HA4404B (SOIC)
TOP VIEW

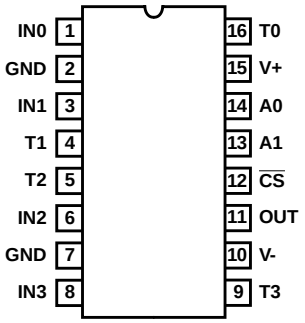

Functional Diagram

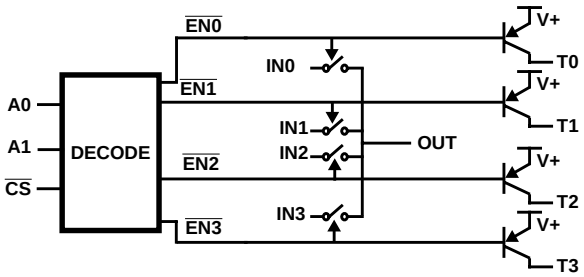

TRUTH TABLE

CS	A1	A0	OUT	ACTIVE TALLY OUTPUT
0	0	0	IN0	T0
0	0	1	IN1	T1
0	1	0	IN2	T2
0	1	1	IN3	T3
1	X	X	High - Z	None, All High - Z

CAUTION: These devices are sensitive to electrostatic discharge. Users should follow proper IC Handling Procedures.
1-888-INTERSIL or 321-724-7143 | Copyright © Intersil Corporation 1999

Absolute Maximum Ratings

Voltage Between V+ and V- 12V
Input Voltage. . . . . V_{SUPPLY}
Digital Input Current (Note 2) . . . . . ±25mA
Analog Input Current (Note 2) . . . . . ±5mA
Output Current 20mA
ESD Rating
Human Body Model (Per MIL-STD-883 Method 3015.7) . . 2000V

Thermal Information

Thermal Resistance (Typical, Note 1) θ_{JA} ($^oC/W$)
SOIC Package 115
Maximum Junction Temperature (Die). . . . . 175^oC
Maximum Junction Temperature (Plastic Package) . . . . . 150^oC
Maximum Storage Temperature Range . . . . . -65^oC to 150^oC
Maximum Lead Temperature (Soldering 10s) . . . . . 300^oC
(SOIC - Lead Tips Only)

Operating Conditions

Temperature Range . . . . . 0^oC to 70^oC

CAUTION: Stresses above those listed in "Absolute Maximum Ratings" may cause permanent damage to the device. This is a stress only rating and operation of the device at these or any other conditions above those indicated in the operational sections of this specification is not implied.

NOTES:

5. θ_{JA} is measured with the component mounted on an evaluation PC board in free air.
6. If an input signal is applied before the supplies are powered up, the input current must be limited to these maximum values.

Electrical Specifications

V_{SUPPLY} = ±5V, R_L = 10kΩ, $V_{\overline{CS}}$ = 0.8V, Unless Otherwise Specified

PARAMETER	TEST CONDITIONS	(NOTE 4) TEMP. (^oC)	MIN	TYP	MAX	UNITS
DC SUPPLY CHARACTERISTICS						
Supply Voltage		Full	±4.5	±5.0	±5.5	V
Supply Current (V_{OUT} = 0V)	$V_{\overline{CS}}$ = 0.8V	25, 70	-	10.5	13	mA
	$V_{\overline{CS}}$ = 0.8V	0	-	-	15.5	mA
	$V_{\overline{CS}}$ = 2.0V	25, 70	-	400	450	µA
	$V_{\overline{CS}}$ = 2.0V	0	-	400	580	µA
ANALOG DC CHARACTERISTICS						
Output Voltage Swing without Clipping	$V_{OUT} = V_{IN} \pm V_{IO} \pm 20mV$	25, 70	±2.7	±2.8	-	V
		0	±2.4	±2.5	-	V
Output Current		Full	15	20	-	mA
Input Bias Current		Full	-	30	50	µA
Output Offset Voltage		Full	-10	-	10	mV
Output Offset Voltage Drift (Note 3)		Full	-	25	50	$\mu V/^oC$
SWITCHING CHARACTERISTICS						
Turn-On Time		25	-	160	-	ns
Turn-Off Time		25	-	320	-	ns
Output Glitch During Switching		25	-	±10	-	mV
DIGITAL DC CHARACTERISTICS						
Input Logic Voltage	High	Full	2	-	-	V
	Low	Full	-	-	0.8	V
Input Current	0V to 4V	Full	-2	-	2	µA
Tally Output High Voltage	I_{OH} = 1mA	Full	4.7	4.8	-	V
Tally Off Leakage Current	V_{TALLY} = 0V	Full	-20	-	20	µA
AC CHARACTERISTICS						
Insertion Loss	$1V_{P-P}$	25	-	0.055	0.063	dB
		Full	-	0.07	0.08	dB
Channel-to-Channel Insertion Loss Match		Full	-	±0.004	±0.006	dB

Electrical Specifications V_{SUPPLY} = ±5V, R_L = 10kΩ, $V_{\overline{CS}}$ = 0.8V, Unless Otherwise Specified **(Continued)**

PARAMETER	TEST CONDITIONS	(NOTE 4) TEMP. (°C)	MIN	TYP	MAX	UNITS
-3dB Bandwidth	R_S = 50Ω, C_L = 11pF	25	-	330	-	MHz
	R_S = 24Ω, C_L = 19pF	25	-	290	-	MHz
	R_S = 15Ω, C_L = 34pF	25	-	210	-	MHz
	R_S = 11Ω, C_L = 49pF	25	-	170	-	MHz
±0.1dB Flat Bandwidth	R_S = 50Ω, C_L = 11pF	25	-	165	-	MHz
	R_S = 24Ω, C_L = 19pF	25	-	130	-	MHz
	R_S = 15Ω, C_L = 34pF	25	-	137	-	MHz
	R_S = 11Ω, C_L = 49pF	25	-	100	-	MHz
Input Resistance		Full	200	400	-	kΩ
Input Capacitance		Full	-	1.5	-	pF
Enabled Output Resistance		Full	-	15	-	Ω
Disabled Output Capacitance	$V_{\overline{CS}}$ = 2.0V	Full	-	2.5	-	pF
Differential Gain	4.43MHz, Note 3	25	-	0.01	0.02	%
Differential Phase	4.43MHz, Note 3	25	-	0.01	0.02	Degrees
Off Isolation	$1V_{P-P}$, 100MHz, $V_{\overline{CS}}$ = 2.0V, R_L = 10Ω	Full	-	70	-	dB
Crosstalk Rejection	$1V_{P-P}$, 30MHz	Full	-	80	-	dB
Slew Rate ($1.5V_{P-P}$, +SR/-SR)	R_S = 50Ω, C_L = 11pF	25	-	1280/1260	-	V/µs
	R_S = 24Ω, C_L = 19pF	25	-	1190/1170	-	V/µs
	R_S = 15Ω, C_L = 34pF	25	-	960/930	-	V/µs
	R_S = 11Ω, C_L = 49pF	25	-	810/790	-	V/µs
Total Harmonic Distortion	10MHz, R_L = 1kΩ, Note 3	Full	-	0.01	0.1	%
Disabled Output Resistance	$V_{\overline{CS}}$ = 2.0V	Full	-	12	-	MΩ

NOTES:

7. This parameter is not tested. The limits are guaranteed based on lab characterization, and reflect lot-to-lot variation.
8. Units are 100% tested at 25°C; guaranteed, but not tested at 0°C and 70°C.

AC Test Circuit

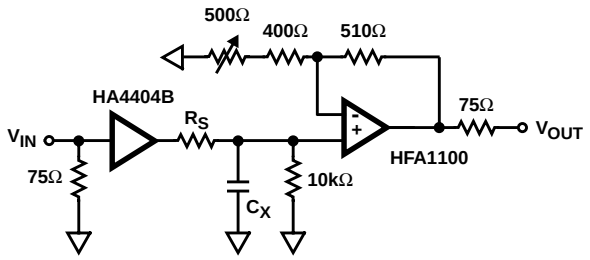

NOTE: $C_L = C_X$ + Test Fixture Capacitance.

PC Board Layout

The frequency response of this circuit depends greatly on the care taken in designing the PC board. **The use of low inductance components such as chip resistors and chip capacitors is strongly recommended, while a solid ground plane is a must!**

Attention should be given to decoupling the power supplies. A large value (10µF) tantalum in parallel with a small value (0.1µF) chip capacitor works well in most cases.

Keep input and output traces as short as possible, because trace inductance and capacitance can easily become the performance limiting items.

Application Information

General

The HA4404B is a 4 x 1 crosspoint switch that is ideal for the matrix element of high performance switchers and routers. This crosspoint's low input capacitance and high input resistance provide excellent video terminations when used with an external 75Ω resistor. Nevertheless, if several HA4404B inputs are connected together, the use of an input buffer should be considered (see Figure 1). This crosspoint contains no feedback or gain setting resistors, so the output is a true high impedance load when the IC is disabled ($\overline{CS}$ = 1).

Ground Connections

All GND pins are connected to a common point on the die, so any one of them will suffice as the functional GND connection. For the best isolation and crosstalk rejection, however, all GND pins must connect to the GND plane.

Frequency Response

Most applications utilizing the HA4404B require a series output resistor, R_S, to tune the response for the specific load capacitance, C_L, driven. Bandwidth and slew rate degrade as C_L increases (as shown in the Electrical Specification table), so give careful consideration to component placement to minimize trace length. In big matrix configurations where C_L is large, better frequency response is obtained by cascading two levels of crosspoints in the case of multiplexed outputs (see Figure 2), or distributing the load between two drivers if C_L is due to bussing and subsequent stage input capacitance.

Control Signals

$\overline{CS}$ - This is a TTL/CMOS compatible, active low Chip Select input. When driven high, $\overline{CS}$ forces the output to a true high impedance state and reduces the power dissipation by a factor of 25. The $\overline{CS}$ input has no on-chip pull-down resistor, so it must be connected to a logic low (recommend GND) if the enable function isn't utilized.

A0, A1 - These are binary coded, TTL/CMOS compatible address inputs that select which one of the four inputs connect to the crosspoint output.

T0-T3 - The Tally outputs are open collector PNP transistors connected to V+. When CS = 0, the PNP transistor associated with the selected input is enabled and current is delivered to the load. When the crosspoint is disabled, or the channel is unselected, the Tally output(s) present a very high impedance to the external circuitry. Several Tally outputs may be wire OR'd together to generate complex control signals, as shown in the application circuits below. The Tally load may be terminated to GND or to V- as long as the continuous output current doesn't exceed 3mA (6mA at 50% duty cycle, etc.).

Switcher/Router Applications

Figure 1 illustrates one possible implementation of a wideband, low power, 4 x 4 switcher/router utilizing the HA4404B for the switch matrix. A 4 x 4 switcher/router allows any of the four outputs to be driven by any one of the four inputs (e.g., each of the four inputs may connect to a different output, or an input may connect to multiple outputs). This application utilizes the HA4600 (video buffer with output disable) for the input buffer, the HA4404B as the switch matrix, and the HFA1112 (programmable gain buffer) as the gain of two output driver. Figure 2 details a 16 x 1 switcher (basically a 16:1 mux) which uses the HA4201 (1 x 1 crosspoint) and the HA4404B in a cascaded stage configuration to minimize capacitive loading at each output node, thus increasing system bandwidth.

Power Up Considerations

No signals should be applied to the analog or digital inputs before the power supplies are activated. Latch-up may occur if the inputs are driven at the time of power up. To prevent latch-up, the input currents during power up must not exceed the values listed in the Absolute Maximum Ratings.

Intersil's Crosspoint Family

Intersil offers a variety of 4 x 1 and 1 x 1 crosspoint switches. In addition to the HA4404B, the 4 x 1 family includes the HA4314 and HA4344. The HA4314 is a basic 14 lead device without Tally outputs. The HA4344 is a 16 lead crosspoint with synchronized control lines (A0, A1, CS). With synchronization, the control information for the next channel switch can be loaded into the crosspoint without affecting the current state. On a subsequent clock edge the stored control state effects the desired channel switch.

The 1 x 1 family is comprised of the HA4201 and HA4600. They are essentially similar devices, but the HA4201 includes a Tally output. The 1 x 1s are useful as high performance video input buffers, or in a switch matrix requiring very high off isolation.

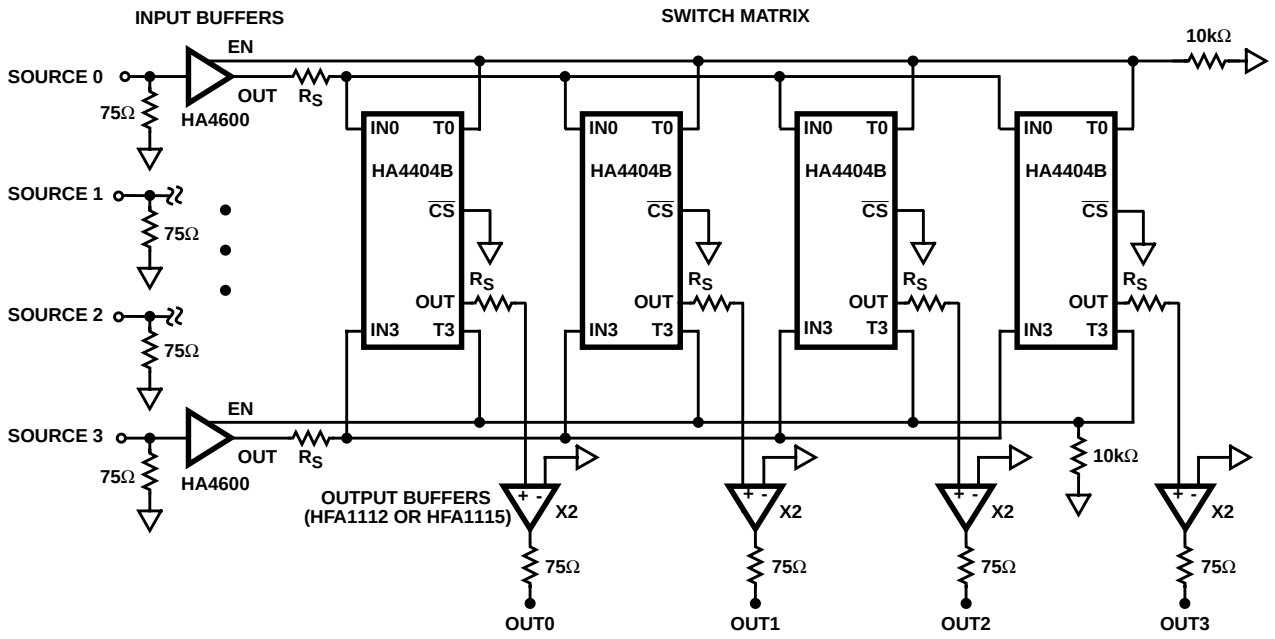

FIGURE 1. 4 X 4 SWITCHER/ROUTER APPLICATION

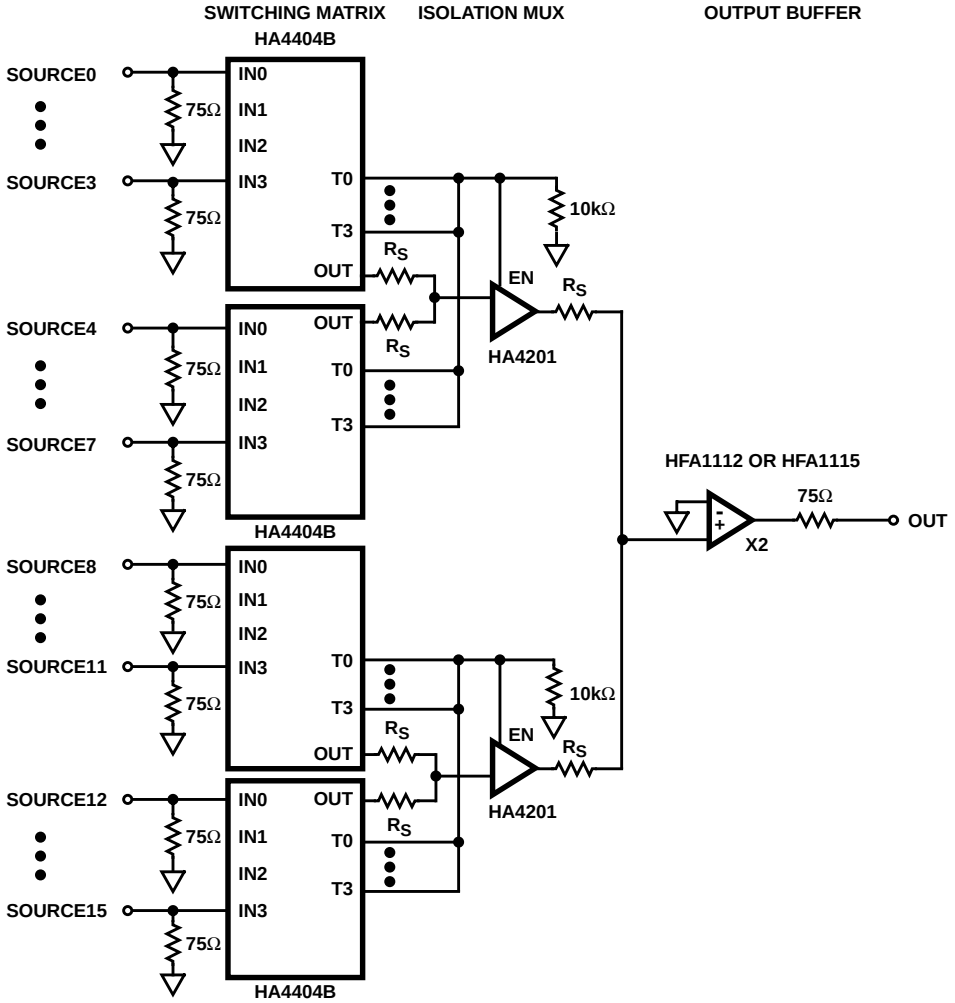

FIGURE 2. 16 X 1 SWITCHER APPLICATION

Typical Performance Curves V_{SUPPLY} = ±5V, T_A = 25°C, R_L = 10kΩ, Unless Otherwise Specified

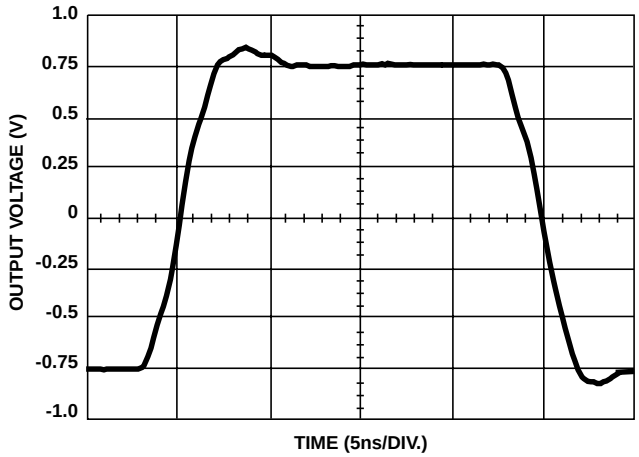

FIGURE 3. LARGE SIGNAL PULSE RESPONSE

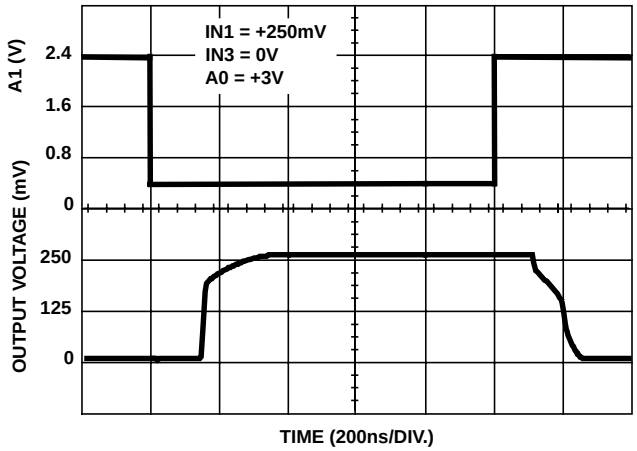

FIGURE 4. CHANNEL-TO-CHANNEL SWITCHING RESPONSE

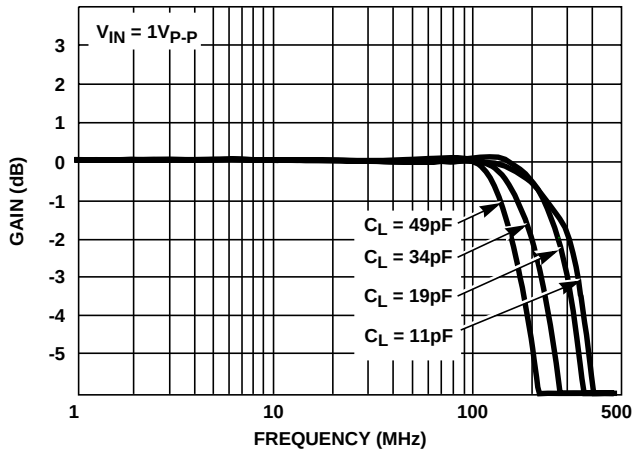

FIGURE 5. FREQUENCY RESPONSE

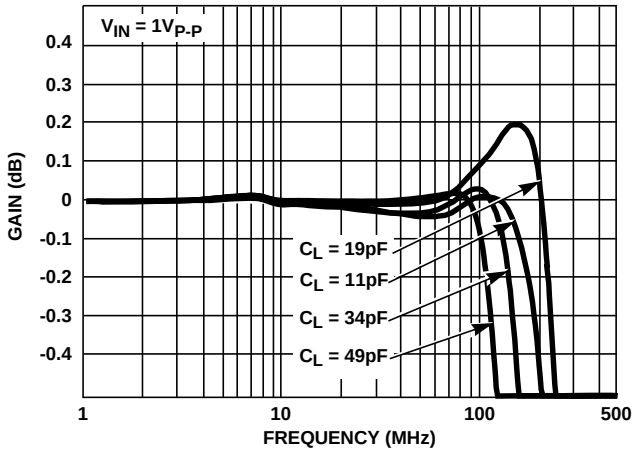

FIGURE 6. GAIN FLATNESS

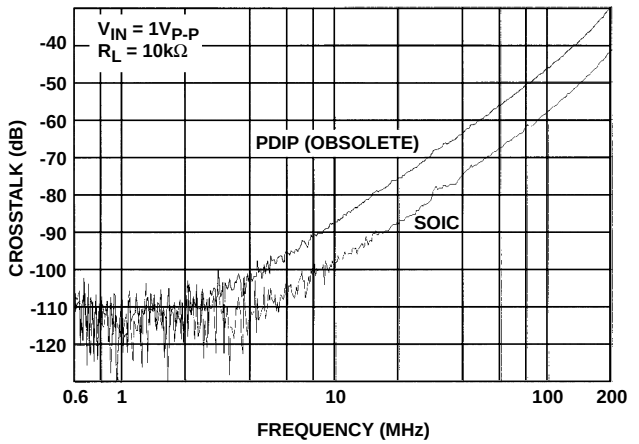

FIGURE 7. ALL HOSTILE CROSSTALK REJECTION

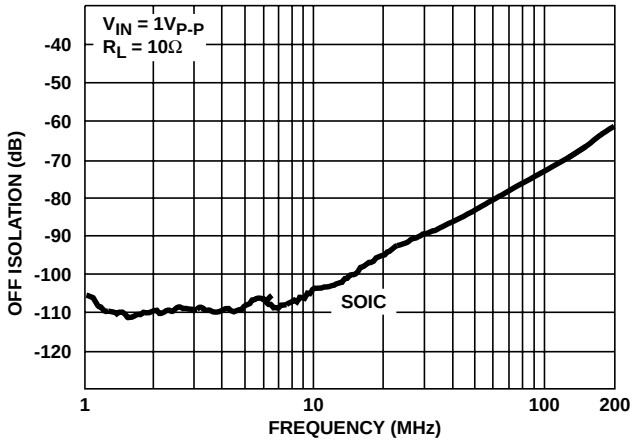

FIGURE 8. ALL HOSTILE OFF ISOLATION

Typical Performance Curves V_{SUPPLY} = ±5V, T_A = 25°C, R_L = 10kΩ, Unless Otherwise Specified **(Continued)**

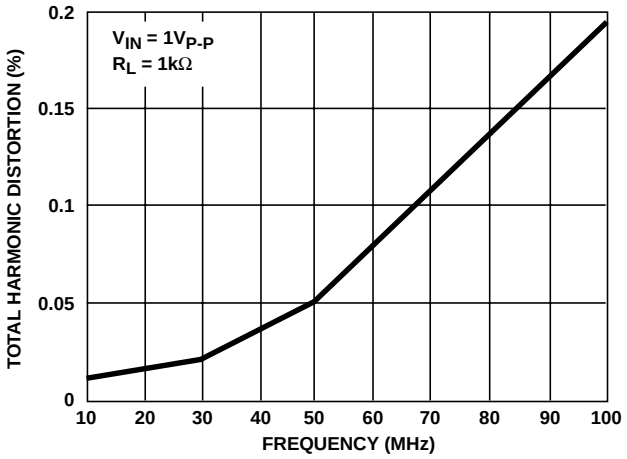

FIGURE 9. TOTAL HARMONIC DISTORTION vs FREQUENCY

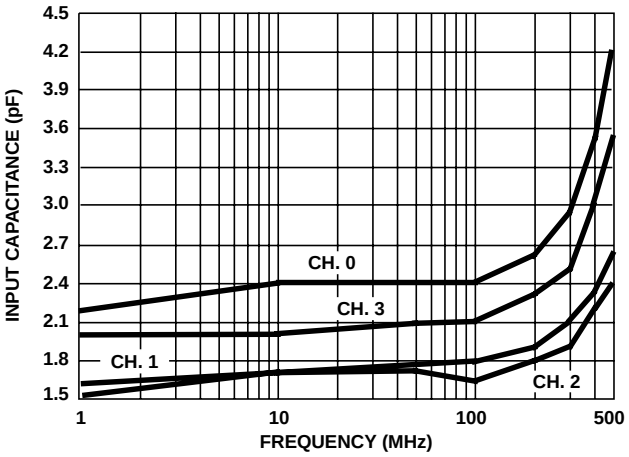

FIGURE 10. INPUT CAPACITANCE vs FREQUENCY

Die Characteristics

DIE DIMENSIONS:

65 mils x 118 mils x 19 mils
1640µm x 3000µm x 483µm

METALLIZATION:

Type: Metal 1: AlCu (1%)/TiW
Thickness: Metal 1: 6kÅ ±0.8kÅ

Type: Metal 2: AlCu (1%)
Thickness: Metal 2: 16kÅ ±1.1kÅ

PASSIVATION:

Type: Nitride
Thickness: 4kÅ ±0.5kÅ

TRANSISTOR COUNT:

200

SUBSTRATE POTENTIAL (Powered Up):

V-

Metallization Mask Layout

HA4404B

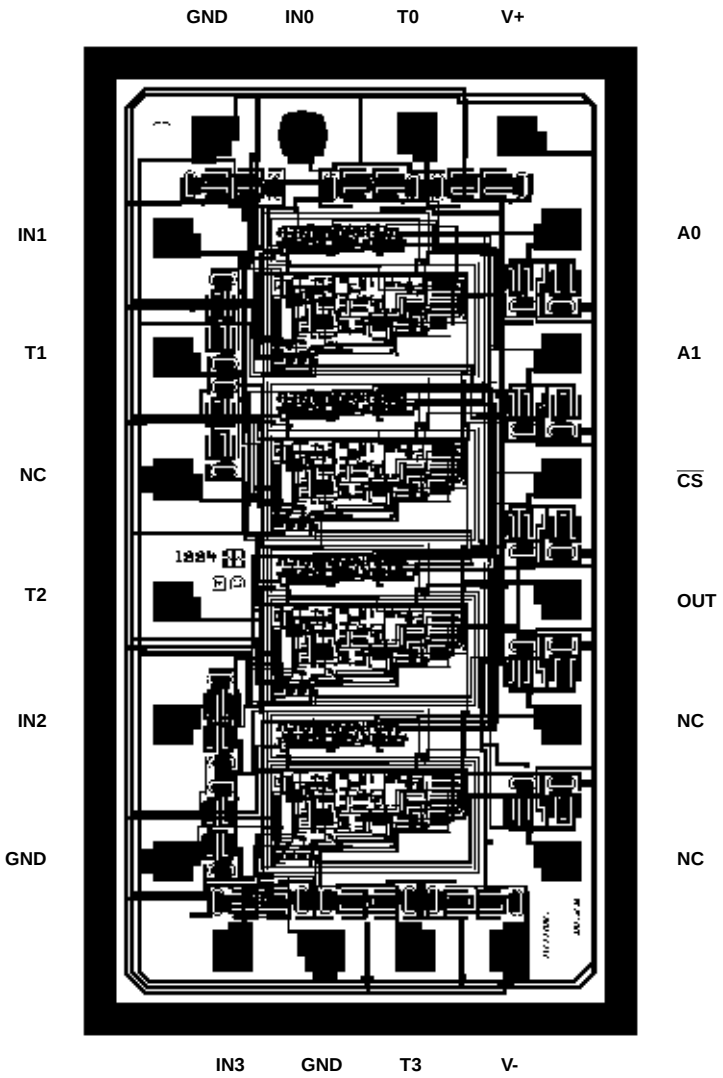

Small Outline Plastic Packages (SOIC)

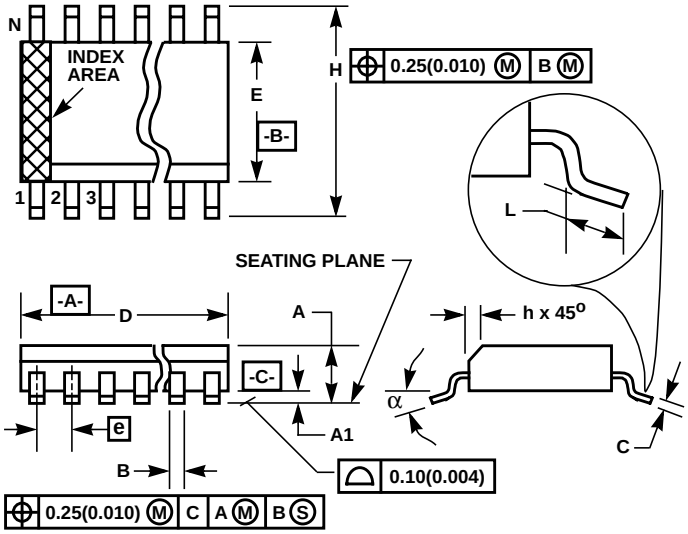

M16.15 **(JEDEC MS-012-AC ISSUE C)**
16 LEAD NARROW BODY SMALL OUTLINE PLASTIC PACKAGE

SYMBOL	INCHES		MILLIMETERS		NOTES
	MIN	MAX	MIN	MAX	
A	0.0532	0.0688	1.35	1.75	-
A1	0.0040	0.0098	0.10	0.25	-
B	0.013	0.020	0.33	0.51	9
C	0.0075	0.0098	0.19	0.25	-
D	0.3859	0.3937	9.80	10.00	3
E	0.1497	0.1574	3.80	4.00	4
e	0.050 BSC		1.27 BSC		-
H	0.2284	0.2440	5.80	6.20	-
h	0.0099	0.0196	0.25	0.50	5
L	0.016	0.050	0.40	1.27	6
N	16		16		7
α	0°	8°	0°	8°	-

Rev. 0 12/93

NOTES:

1. Symbols are defined in the “MO Series Symbol List” in Section 2.2 of Publication Number 95.
2. Dimensioning and tolerancing per ANSI Y14.5M-1982.
3. Dimension “D” does not include mold flash, protrusions or gate burrs. Mold flash, protrusion and gate burrs shall not exceed 0.15mm (0.006 inch) per side.
4. Dimension “E” does not include interlead flash or protrusions. Interlead flash and protrusions shall not exceed 0.25mm (0.010 inch) per side.
5. The chamfer on the body is optional. If it is not present, a visual index feature must be located within the crosshatched area.
6. “L” is the length of terminal for soldering to a substrate.
7. “N” is the number of terminal positions.
8. Terminal numbers are shown for reference only.
9. The lead width “B”, as measured 0.36mm (0.014 inch) or greater above the seating plane, shall not exceed a maximum value of 0.61mm (0.024 inch).
10. Controlling dimension: MILLIMETER. Converted inch dimensions are not necessarily exact.

This datasheet has been downloaded from:

www.DatasheetCatalog.com

Datasheets for electronic components.

Littlediode supplies new, hard to find or obsolete electronic components and semiconductors all over the world.

With over two million different components listed you are sure to find the part you need.

Feel free to visit us today at our online store:

LittleDiode.com

Looking forward to providing you with the best possible service.