HITACHI

2SK2330 (L), 2SK2330 (S)

Silicon N Channel MOS FET

Application

High speed power switching

Features

- Low on–resistance
- High speed switching
- No secondary breakdown
- Suitable for Switching regulator, DC – DC converter

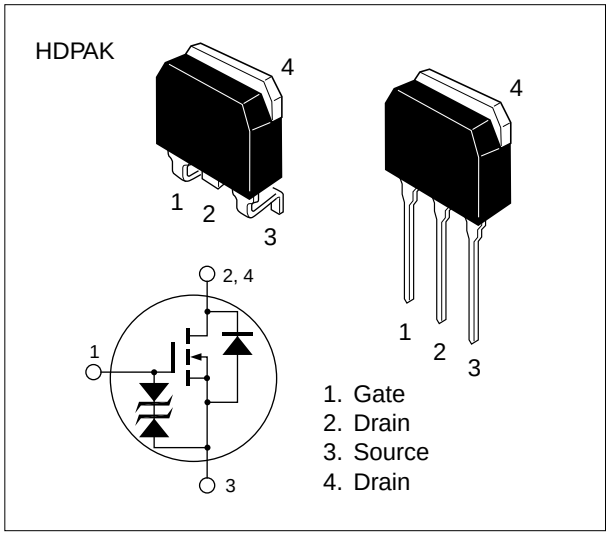

Table 1 Absolute Maximum Ratings (Ta = 25°C)

Item	Symbol	Ratings	Unit
Drain to source voltage	V_{DSS}	500	V
Gate to source voltage	V_{GSS}	±30	V
Drain current	I_D	15	A
Drain peak current	$I_{D(pulse)}$*	60	A
Body–drain diode reverse drain current	I_{DR}	15	A
Channel dissipation	Pch**	100	W
Channel temperature	Tch	150	°C
Storage temperature	Tstg	–55 to +150	°C

* PW ≤ 10 µs, duty cycle ≤ 1 %
** Value at Tc = 25 °C

Table 2 Electrical Characteristics (Ta = 25°C)

Item	Symbol	Min	Typ	Max	Unit	Test conditions
Drain to source breakdown voltage	$V_{(BR)DSS}$	500	—	—	V	I_D = 10 mA, V_{GS} = 0
Gate to source breakdown voltage	$V_{(BR)GSS}$	±30	—	—	V	I_G = ±100 µA, V_{DS} = 0
Gate to source leak current	I_{GSS}	—	—	±10	µA	V_{GS} = ±25 V, V_{DS} = 0
Zero gate voltage drain current	I_{DSS}	—	—	250	µA	V_{DS} = 400 V, V_{GS} = 0
Gate to source cutoff voltage	$V_{GS(off)}$	2.0	—	3.0	V	I_D = 1 mA, V_{DS} = 10 V
Static drain to source on state resistance	$R_{DS(on)}$	—	0.3	0.4	Ω	I_D = 8 A V_{GS} = 10 V *
Forward transfer admittance	$\|y_{fs}\|$	8	13	—	S	I_D = 8 A V_{DS} = 10 V *
Input capacitance	Ciss	—	2050	—	pF	V_{DS} = 10 V
Output capacitance	Coss	—	600	—	pF	V_{GS} = 0
Reverse transfer capacitance	Crss	—	75	—	pF	f = 1 MHz
Turn–on delay time	$t_{d(on)}$	—	30	—	ns	I_D = 8 A
Rise time	t_r	—	110	—	ns	V_{GS} = 10 V
Turn–off delay time	$t_{d(off)}$	—	150	—	ns	R_L = 3.75 Ω
Fall time	t_f	—	70	—	ns	
Body–drain diode forward voltage	V_{DF}	—	1.0	—	V	I_F = 15 A, V_{GS} = 0
Body–drain diode reverse recovery time	t_{rr}	—	500	—	µs	I_F = 15 A, V_{GS} = 0, diF / dt = 100 A / µs

* Pulse Test

See characteristic curves of 2SK1168.