HIN230 thru HIN241

August 1997

+5V Powered RS-232 Transmitters/Receivers

Features

- **Meets All RS-232E and V.28 Specifications**
- **Requires Only Single +5V Power Supply**
  - **(+5V and +12V - HIN231 and HIN239)**
- **HIN233 and HIN235 Require No External Capacitors**
- **Onboard Voltage Doubler/Inverter**
- **Low Power Consumption**
- **Low Power Shutdown Function**
- **Three-State TTL/CMOS Receiver Outputs**
- **Multiple Drivers**
  - **±10V Output Swing for +5V Input**
  - **300Ω Power-Off Source Impedance**
  - **Output Current Limiting**
  - **TTL/CMOS Compatible**
  - **30V/µs Maximum Slew Rate**
- **Multiple Receivers**
  - **±30V Input Voltage Range**
  - **3kΩ to 7kΩ Input Impedance**
  - **0.5V Hysteresis to Improve Noise Rejection**

Description

The HIN230-HIN241 family of RS-232 transmitters/receivers interface circuits meet all EIA RS-232E and V.28 specifications, and are particularly suited for those applications where ±12V is not available. They require a single +5V power supply (except HIN231 and HIN239) and features onboard charge pump voltage converters which generate +10V and -10V supplies from the 5V supply. The HIN233 and HIN235 require no external capacitors and are ideally suited for applications where circuit board space is critical. The family of devices offer a wide variety of RS-232 transmitter/receiver combinations to accommodate various applications (see Selection Table).

The drivers feature true TTL/CMOS input compatibility, slew-rate-limited output, and 300Ω power-off source impedance. The receivers can handle up to ±30V, and have a 3kΩ to 7kΩ input impedance. The receivers also feature hysteresis to greatly improve noise rejection.

Applications

- **Any System Requiring RS-232 Communications Port**
  - **Computer - Portable, Mainframe, Laptop**
  - **Peripheral - Printers and Terminals**
  - **Instrumentation**
  - **Modems**

Selection Table

PART NUMBER	POWER SUPPLY VOLTAGE	NUMBER OF RS-232 DRIVERS	NUMBER OF RS-232 RECEIVERS	EXTERNAL COMPONENTS	LOW POWER SHUTDOWN/TTL THREE-STATE	NUMBER OF LEADS
HIN230	+5V	5	0	4 Capacitors	YES/NO	20
HIN231	+5V and +7.5V to 13.2V	2	2	2 Capacitors	NO/NO	16
HIN232	+5V	2	2	4 Capacitors	NO/NO	16
HIN233	+5V	2	2	None	NO/NO	20
HIN234	+5V	4	0	4 Capacitors	NO/NO	16
HIN235	+5V	5	5	None	YES/YES	24
HIN236	+5V	4	3	4 Capacitors	YES/YES	24
HIN237	+5V	5	3	4 Capacitors	NO/NO	24
HIN238	+5V	4	4	4 Capacitors	NO/NO	24
HIN239	+5V and +7.5V to 13.2V	3	5	2 Capacitors	NO/YES	24
HIN240	+5V	5	5	4 Capacitors	YES/YES	44
HIN241	+5V	4	5	4 Capacitors	YES/YES	28

CAUTION: These devices are sensitive to electrostatic discharge. Users should follow proper IC Handling Procedures.

Copyright © Harris Corporation 1997

File Number 3138.4

This Material Copyrighted By Its Respective Manufacturer

Ordering Information

PART NUMBER	TEMP. RANGE (°C)	PACKAGE	PKG. NO.
HIN230CB	0 to 70	20 Ld SOIC	M20.3
HIN230IB	-40 to 85	20 Ld SOIC	M20.3
HIN230BY		Die	
HIN231CB	0 to 70	16 Ld SOIC	M16.3
HIN231IB	-40 to 85	16 Ld SOIC	M16.3
HIN231BY		Die	
HIN232CP	0 to 70	16 Ld PDIP	E16.3
HIN232CB	0 to 70	16 Ld SOIC	M16.3
HIN232IP	-40 to 85	16 Ld PDIP	E16.3
HIN232IJ	-40 to 85	16 Ld CERDIP	F16.3
HIN232IB	-40 to 85	16 Ld SOIC	M16.3
HIN232MJ	-55 to 125	16 Ld CERDIP	F16.3
HIN232BY		Die	
HIN233CP	0 to 70	20 Ld PDIP	E20.3
HIN234CB	0 to 70	16 Ld SOIC	M16.3
HIN234IB	-40 to 85	16 Ld SOIC	M16.3
HIN234BY		Die	
HIN235CP	0 to 70	24 Ld PDIP	E24.3
HIN236CP	0 to 70	24 Ld PDIP	E24.3
HIN236CB	0 to 70	24 Ld SOIC	M24.3
HIN236IP	-40 to 85	24 Ld PDIP	E24.3
HIN236IB	-40 to 85	24 Ld SOIC	M24.3

PART NUMBER	TEMP. RANGE (°C)	PACKAGE	PKG. NO.
HIN236BY		Die	
HIN237CP	0 to 70	24 Ld PDIP	E24.3
HIN237CB	0 to 70	24 Ld SOIC	M24.3
HIN237IP	-40 to 85	24 Ld PDIP	E24.3
HIN237IB	-40 to 85	24 Ld SOIC	M24.3
HIN237BY		Die	
HIN238CP	0 to 70	24 Ld PDIP	E24.3
HIN238CB	0 to 70	24 Ld SOIC	M24.3
HIN238IP	-40 to 85	24 Ld PDIP	E24.3
HIN238IB	-40 to 85	24 Ld SOIC	M24.3
HIN238BY		Die	
HIN239CB	0 to 70	24 Ld SOIC	M24.3
HIN239IB	-40 to 85	24 Ld SOIC	M24.3
HIN239BY		Die	
HIN240CN	0 to 70	44 Ld MQFP	Q44.10X10
HIN240IN	-40 to 85	44 Ld MQFP	Q44.10X10
HIN240BY		Die	
HIN241CB	0 to 70	28 Ld SOIC	M28.3
HIN241IB	-40 to 85	28 Ld SOIC	M28.3
HIN241CA	0 to 70	28 Ld SSOP	M28.209
HIN241IA	-40 to 85	28 Ld SSOP	M28.209
HIN241BY		Die	

Pin Descriptions

PIN	FUNCTION
V_{CC}	Power Supply Input 5V ±10%. HIN233 and HIN235 5V ±5%.
V+	Internally generated positive supply (+10V nominal), HIN231 and HIN239 requires +7.5V to +13.2V.
V-	Internally generated negative supply (-10V nominal).
GND	Ground lead. Connect to 0V.
C1+	External capacitor (+ terminal) is connected to this lead.
C1-	External capacitor (- terminal) is connected to this lead.
C2+	External capacitor (+ terminal) is connected to this lead.
C2-	External capacitor (- terminal) is connected to this lead.
T_{IN}	Transmitter Inputs. These leads accept TTL/CMOS levels. An internal 400kΩ pull-up resistor to V_{CC} is connected to each lead.
T_{OUT}	Transmitter Outputs. These are RS-232 levels (nominally ±10V).
R_{IN}	Receiver Inputs. These inputs accept RS-232 input levels. An internal 5kΩ pull-down resistor to GND is connected to each input.
R_{OUT}	Receiver Outputs. These are TTL/CMOS levels.
$\overline{EN}$	Enable input. This is an active low input which enables the receiver outputs. With $\overline{EN}$ = 5V, the outputs are placed in a high impedance state.
SD	Shutdown Input. With SD = 5V, the charge pump is disabled, the receiver outputs are in a high impedance state and the transmitters are shut off.
NC	No Connect. No connections are made to these leads.

This Material Copyrighted By Its Respective Manufacturer

Pinouts

HIN230 (SOIC)
TOP VIEW

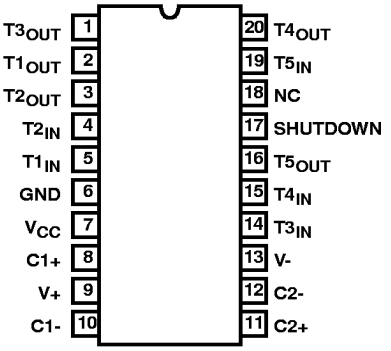

HIN231 (SOIC)
TOP VIEW

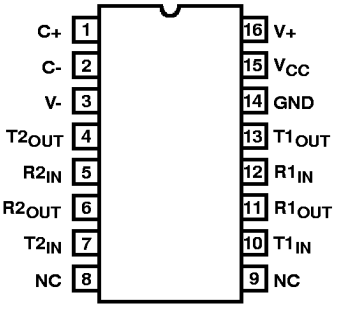

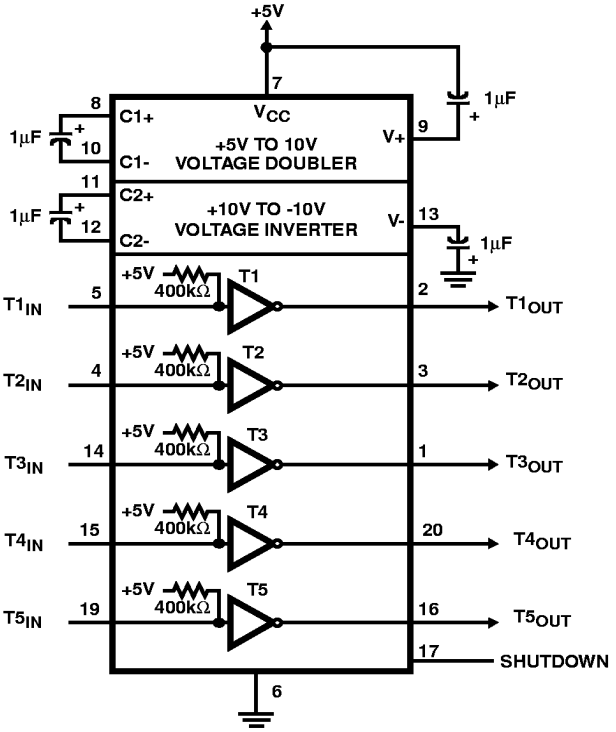

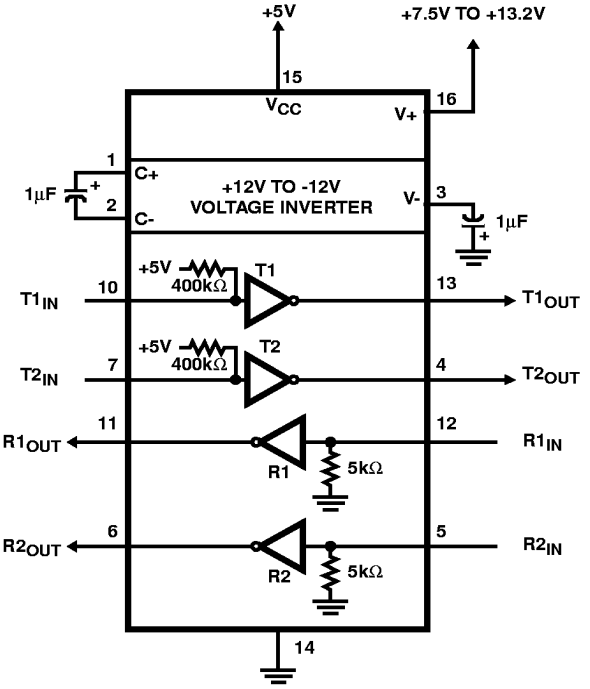

This Material Copyrighted By Its Respective Manufacturer

Pinouts (Continued)

HIN232 (PDIP, CERDIP, SOIC)
TOP VIEW

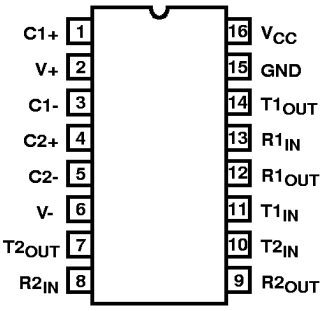

HIN233 (PDIP, SOIC)
TOP VIEW

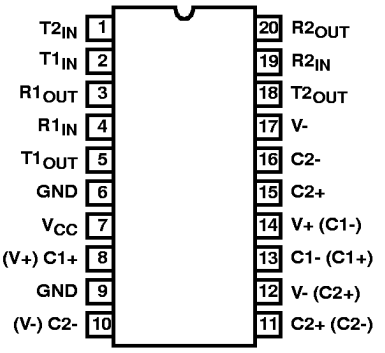

NOTE: Pin numbers in parentheses are for SOIC Package.

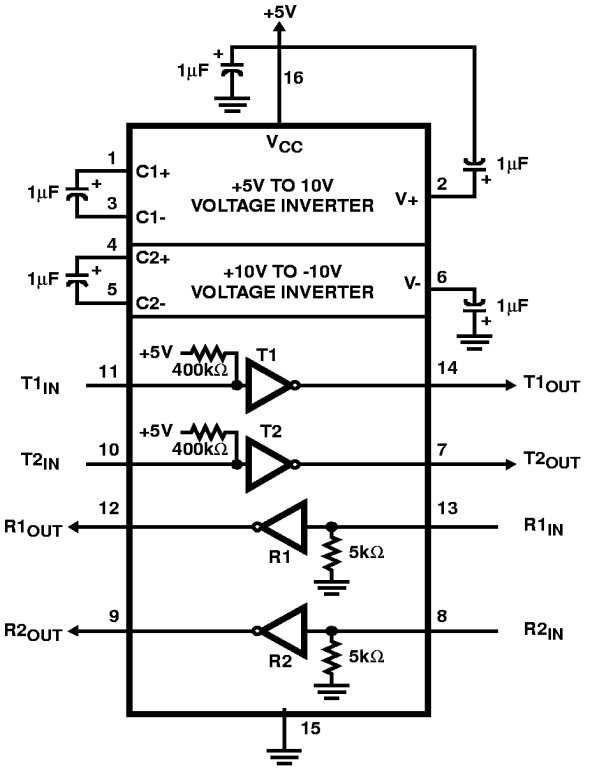

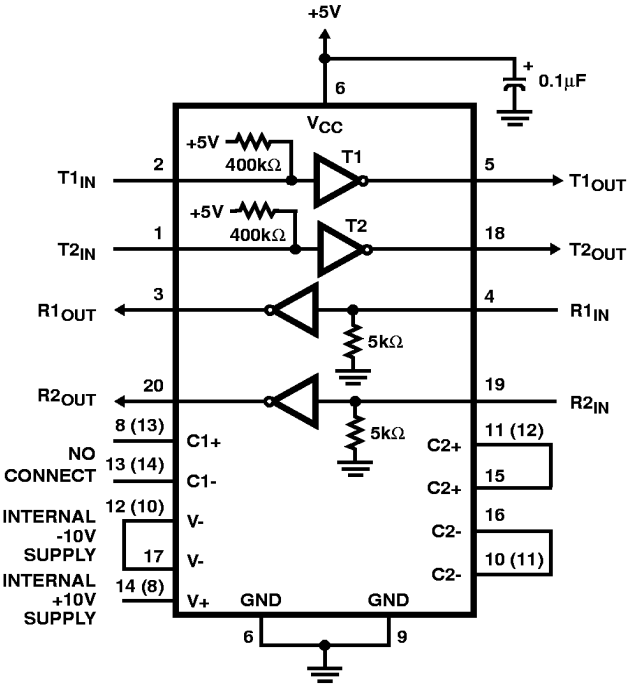

This Material Copyrighted By Its Respective Manufacturer

Pinouts (Continued)

HIN234 (SOIC)
TOP VIEW

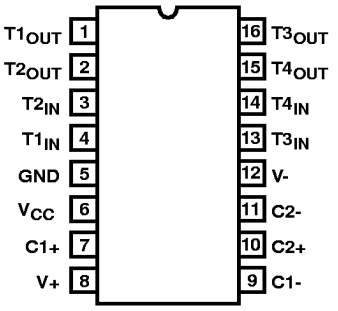

HIN235 (PDIP)
TOP VIEW

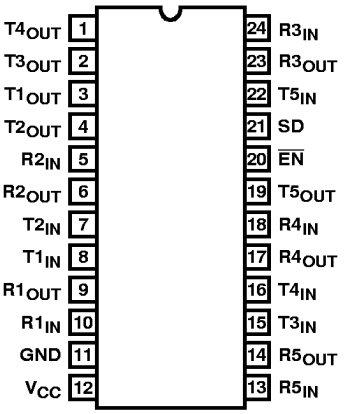

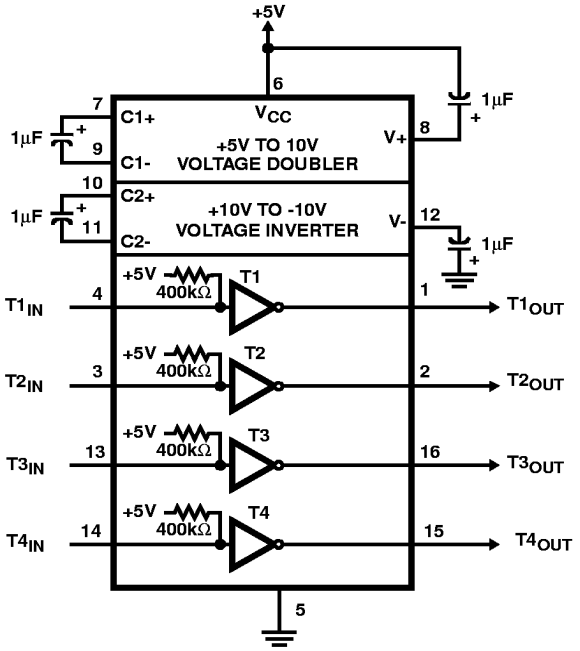

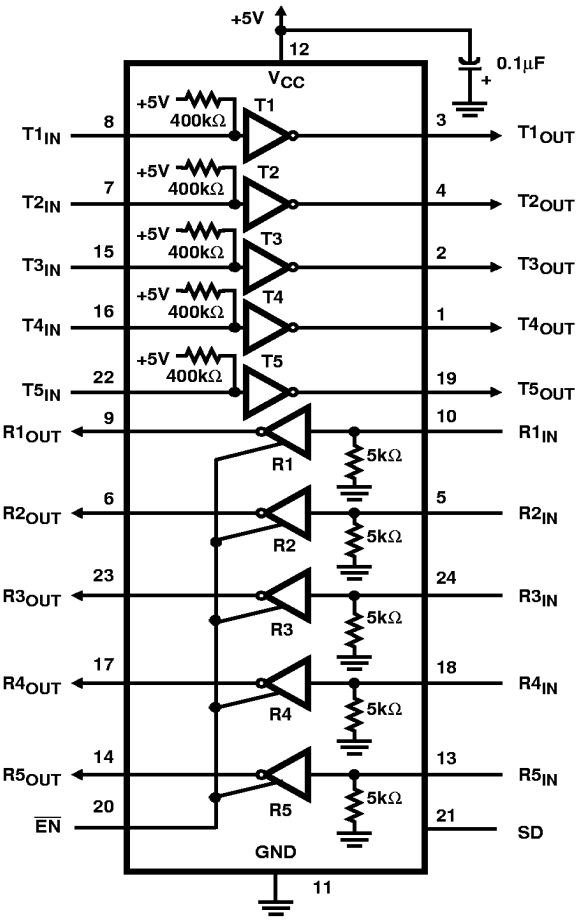

This Material Copyrighted By Its Respective Manufacturer

Pinouts (Continued)

HIN236 (PDIP, SOIC)
TOP VIEW

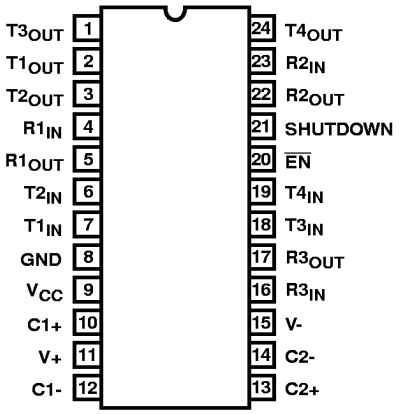

HIN237 (PDIP, SOIC)
TOP VIEW

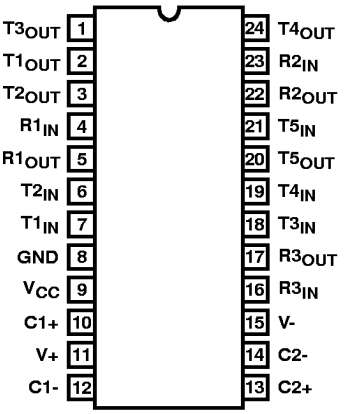

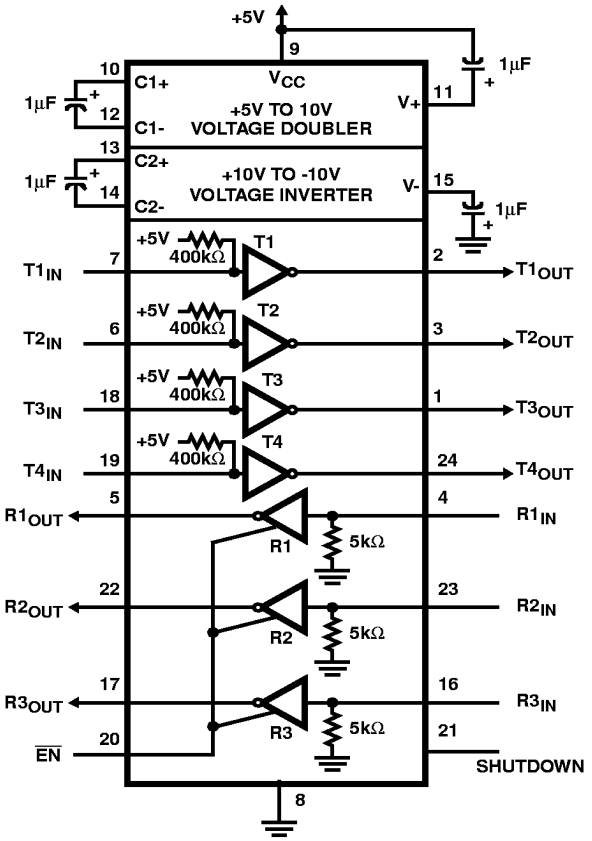

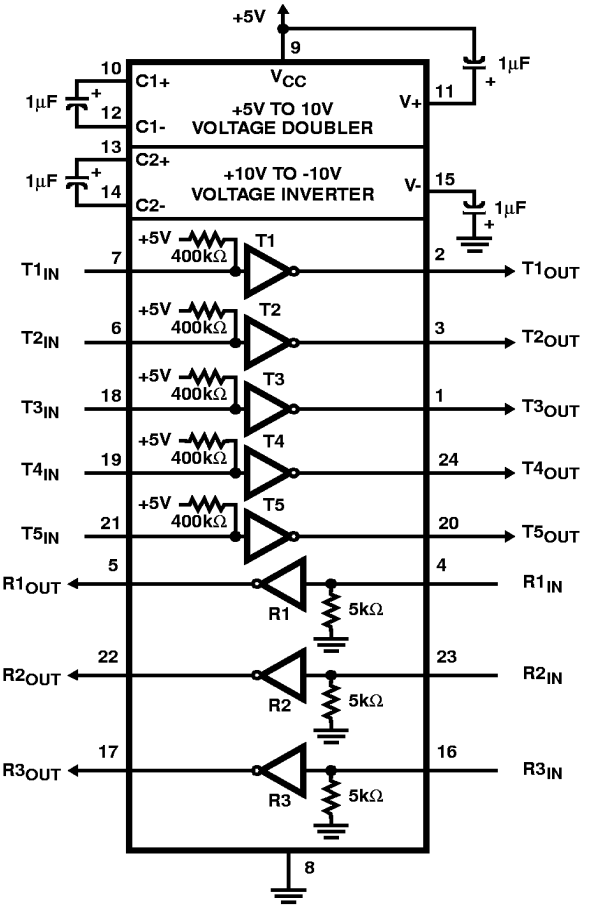

This Material Copyrighted By Its Respective Manufacturer

Pinouts (Continued)

HIN238 (PDIP, SOIC)
TOP VIEW

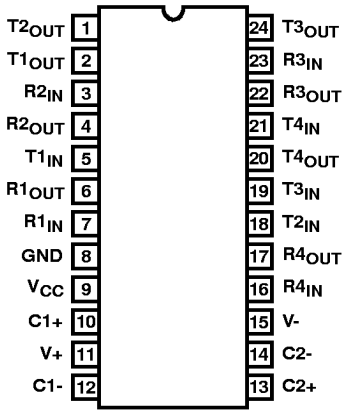

HIN239 (SOIC)
TOP VIEW

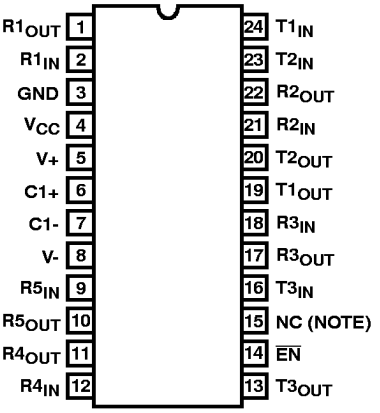

NOTE: No Connect

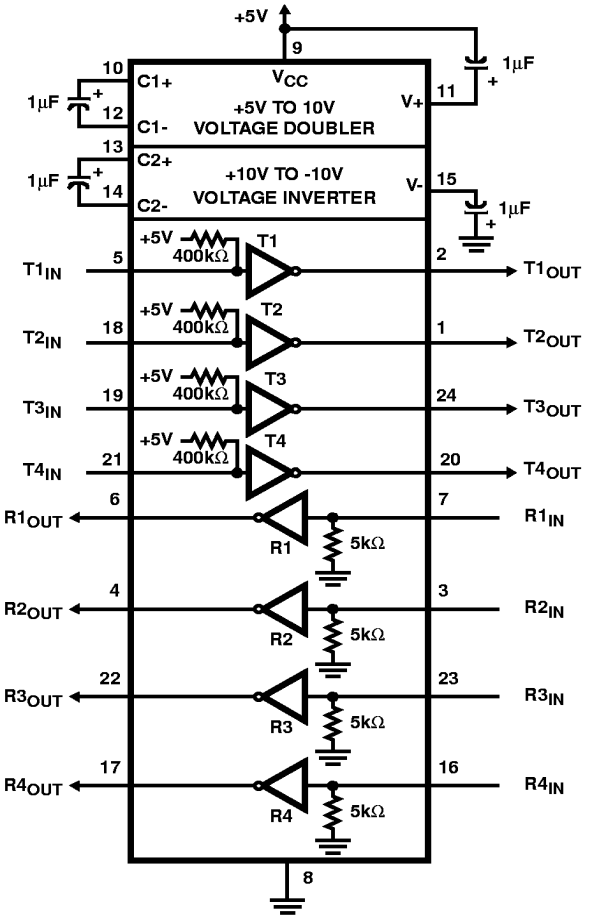

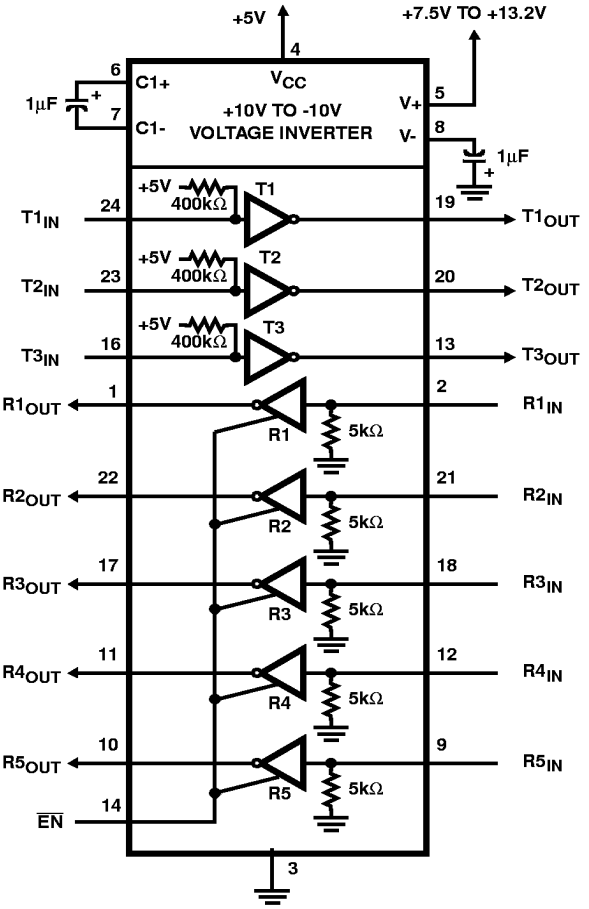

This Material Copyrighted By Its Respective Manufacturer

Pinouts (Continued)

HIN240 (MQFP)

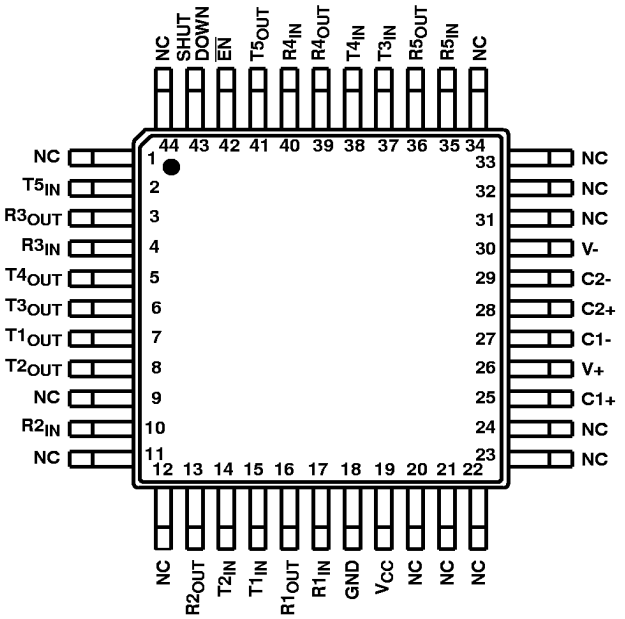

HIN241 (SOIC, SSOP)
TOP VIEW

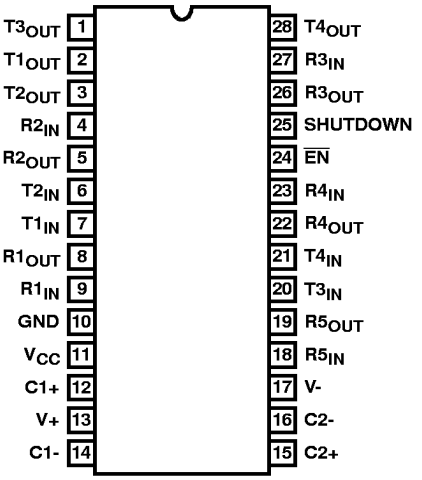

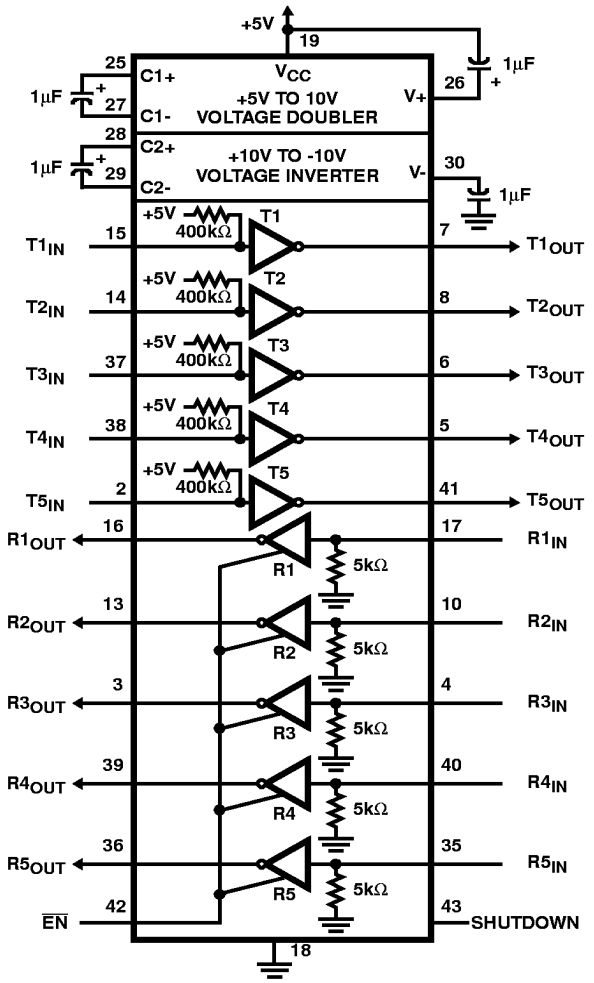

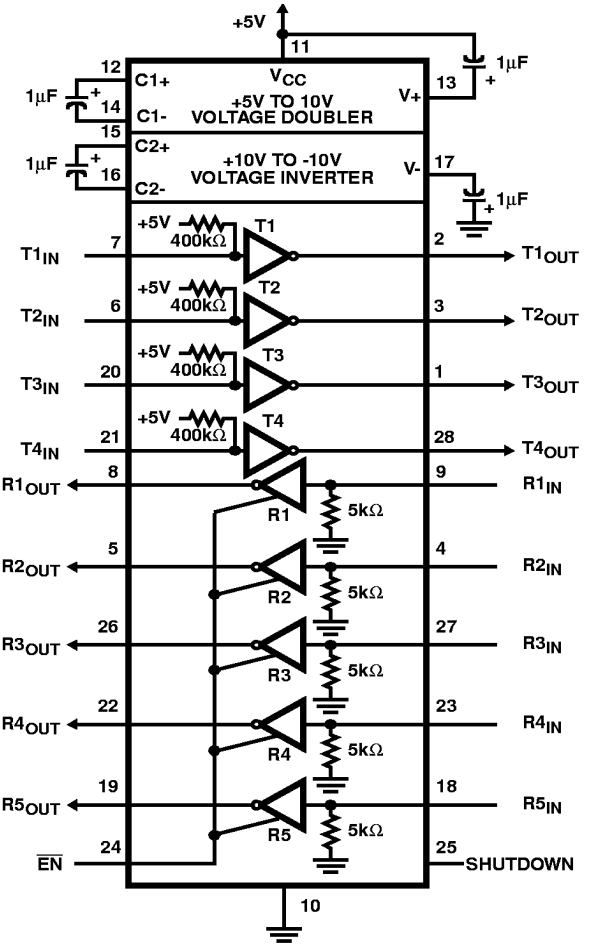

This Material Copyrighted By Its Respective Manufacturer

Absolute Maximum Ratings

V_{CC} to Ground . . . . . (GND -0.3V) < V_{CC} < 6V
V+ to Ground . . . . . (V_{CC} -0.3V) < V+ < 12V
V- to Ground . . . . . -12V < V- < (GND +0.3V)
Input Voltages
  T_{IN} . . . . . (V- -0.3V) < V_{IN} < (V+ +0.3V)
  R_{IN} . . . . . ±30V
Output Voltages
  T_{OUT} . . . . . (V- -0.3V) < V_{TXOUT} < (V+ +0.3V)
  R_{OUT} . . . . . (GND -0.3V) < V_{RXOUT} < (V+ +0.3V)
Short Circuit Duration
  T_{OUT} . . . . . Continuous
  R_{OUT} . . . . . Continuous

Operating Conditions

Temperature Range
  HIN-XXXCX . . . . . 0°C to 70°C
  HIN-XXXIX . . . . . -40°C to 85°C
  HIN-XXXMX . . . . . -55°C to 125°C

Thermal Information

Thermal Resistance (Typical, Note 1)	θ_{JA} (°C/W)	θ_{JC} (°C/W)
16 Ld PDIP Package	90	N/A
24 Ld PDIP Package	75	N/A
16 Ld SOIC (W) Package	100	N/A
24 Ld SOIC Package	80	N/A
28 Ld SOIC Package	75	N/A
28 Ld SSOP Package	100	N/A
44 Ld MQFP Package	80	N/A
16 Ld CERDIP Package	80	18

Maximum Junction Temperature (Hermetic Package) . . . . . 175°C
Maximum Junction Temperature (Plastic Package) . . . . . 150°C
Maximum Storage Temperature Range . . . . . -65°C to 150°C
Maximum Lead Temperature (Soldering 10s) . . . . . 300°C
  (SOIC, SSOP, MQFP - Lead Tips Only)

CAUTION: Stresses above those listed in "Absolute Maximum Ratings" may cause permanent damage to the device. This is a stress only rating and operation of the device at these or any other conditions above those indicated in the operational sections of this specification is not implied.

NOTE:
1. θ_{JA} is measured with the component mounted on an evaluation PC board in free air.

Electrical Specifications

Test Conditions: V_{CC} = +5V ±10%, (V_{CC} = +5V ±5% HIN233 and HIN235)
T_A = Operating Temperature Range

PARAMETER	TEST CONDITIONS	MIN	TYP	MAX	UNITS
Output Voltage Swing, T_{OUT}	Transmitter Outputs, 3kΩ to Ground	±5	±9	±10	V
Power Supply Current, I_{CC}	No Load, T_A = 25°C, HIN232-233	-	5	10	mA
	HIN230, HIN234-238, HIN240-241	-	7	15	mA
	HIN231, HIN239	-	0.4	1	mA
V+ Power Supply Current, I_{CC}	HIN231	-	1.8	5	mA
	HIN239	-	5.0	15	mA
Shutdown Supply Current, I_{CC}(SD)		-	1	10	µA
Input Logic Low, T_{IN}, $\overline{EN}$, V_{IL}	T_{IN}, $\overline{EN}$, Shutdown	-	-	0.8	V
Input Logic High, V_{IH}	T_{IN}	2.0	-	-	V
	$\overline{EN}$, Shutdown	2.4	-	-	V
Logic Pullup Current, I_P	T_{IN} = 0V	-	15	200	µA
RS-232 Input Voltage Range, V_{IN}		-30	-	+30	V
Receiver Input Impedance, R_{IN}	V_{IN} = ±3V	3.0	5.0	7.0	kΩ
Receiver Input Low Threshold, V_{IN} (H-L)	V_{CC} = 5V, T_A = 25°C	0.8	1.2	-	V
Receiver Input High Threshold, V_{IN} (L-H)	V_{CC} = 5V, T_A = 25°C	-	1.7	2.4	V
Receiver Input Hysteresis, V_{HYST}		0.2	0.5	1.0	V
TTL/CMOS Receiver Output Voltage Low, V_{OL}	I_{OUT} = 1.6mA (HIN231-HIN233 I_{OUT} = 3.2mA)	-	0.1	0.4	V
TTL/CMOS Receiver Output Voltage High, V_{OH}	I_{OUT} = -1.0mA	3.5	4.6	-	V
Output Enable Time, t_{EN}	HIN235, 236, 239, 240, 241	-	400	-	ns
Output Disable Time, t_{DIS}	HIN235, 236, 239, 240, 241	-	250	-	ns
Propagation Delay, t_{PD}	RS-232 to TTL	-	0.5	-	µs
Instantaneous Slew Rate, SR	C_L = 10pF, R_L = 3kΩ, T_A = 25°C (Note 2)	-	-	30	V/µs
Transition Region Slew Rate, SR_T	R_L = 3kΩ, C_L = 2500pF Measured from +3V to -3V or -3V to +3V	-	3	-	V/µs
Output Resistance, R_{OUT}	V_{CC} = V+ = V- = 0V, V_{OUT} = ±2V	300	-	-	Ω
RS-232 Output Short Circuit Current, I_{SC}	T_{OUT} shorted to GND	-	±10	-	mA

NOTE:
2. Guaranteed by design.

This Material Copyrighted By Its Respective Manufacturer

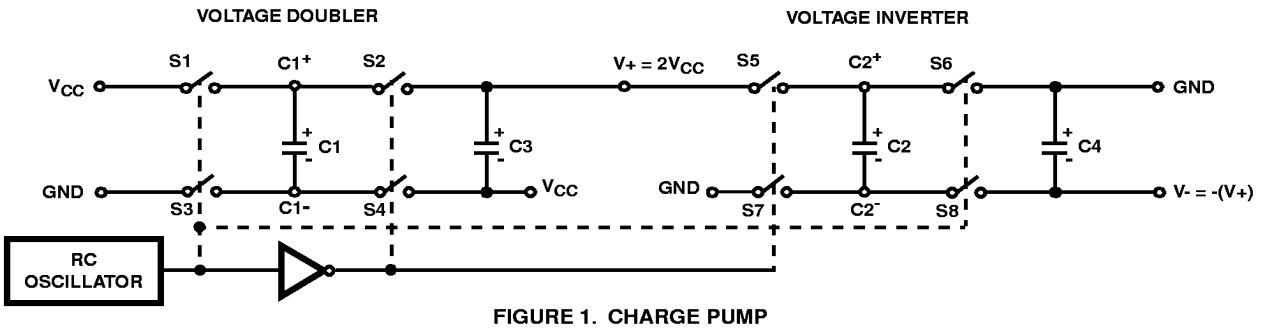

FIGURE 1. CHARGE PUMP

Detailed Description

The HIN230 thru HIN241 family of RS-232 transmitters/receivers are powered by a single +5V power supply (except HIN-231 and HIN239), feature low power consumption, and meet all EIA RS-232C and V.28 specifications. The circuit is divided into three sections: the charge pump, transmitter, and receiver.

Charge Pump

An equivalent circuit of the charge pump is illustrated in Figure 1. The charge pump contains two sections: the voltage doubler and the voltage inverter. Each section is driven by a two phase, internally generated clock to generate +10V and -10V. The nominal clock frequency is 16kHz. During phase one of the clock, capacitor C1 is charged to V_{CC}. During phase two, the voltage on C1 is added to V_{CC}, producing a signal across C3 equal to twice V_{CC}. During phase one, C2 is also charged to $2V_{CC}$, and then during phase two, it is inverted with respect to ground to produce a signal across C4 equal to $-2V_{CC}$. The charge pump accepts input voltages up to 5.5V. The output impedance of the voltage doubler section (V+) is approximately 200Ω, and the output impedance of the voltage inverter section (V-) is approximately 450Ω. A typical application uses 1µF capacitors for C1-C4, however, the value is not critical. Increasing the values of C1 and C2 will lower the output impedance of the voltage doubler and inverter, increasing the values of the reservoir capacitors, C3 and C4, lowers the ripple on the V+ and V- supplies.

During shutdown mode (HIN230, 236, 240 and 241), SHUTDOWN control line set to logic "1", the charge pump is turned off, V+ is pulled down to V_{CC}, V- is pulled up to GND, and the supply current is reduced to less than 10µA. The transmitter outputs are disabled and the receiver outputs are placed in the high impedance state.

Transmitters

The transmitters are TTL/CMOS compatible inverters which translate the inputs to RS-232 outputs. The input logic threshold is about 26% of V_{CC}, or 1.3V for V_{CC} = 5V. A logic 1 at the input results in a voltage of between -5V and V- at the output, and a logic 0 results in a voltage between +5V and (V+ -0.6V). Each transmitter input has an internal 400kΩ pullup resistor so any unused input can be left unconnected and its output remains in its low state. The output voltage swing meets the RS-232C specifications of ±5V minimum with the worst case conditions of: all transmitters driving 3kΩ minimum load impedance, V_{CC} = 4.5V, and maximum allowable operating temperature. The transmitters have an internally limited output slew rate which is less than 30V/µs. The outputs are short circuit protected and can be shorted to ground indefinitely. The powered down output impedance is a minimum of 300Ω with ±2V applied to the outputs and V_{CC} = 0V.

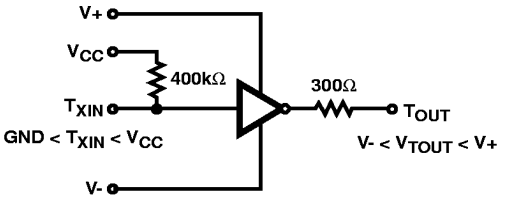

FIGURE 2. TRANSMITTER

Receivers

The receiver inputs accept up to ±30V while presenting the required 3kΩ to 7kΩ input impedance even it the power is off (V_{CC} = 0V). The receivers have a typical input threshold of 1.3V which is within the ±3V limits, known as the transition region, of the RS-232 specifications. The receiver output is 0V to V_{CC}. The output will be low whenever the input is greater than 2.4V and high whenever the input is floating or driven between +0.8V and -30V. The receivers feature 0.5V hysteresis to improve noise rejection. The receiver Enable line $\overline{EN}$, when set to logic "1", (HIN236, 239, 240, and 241) disables the receiver outputs, placing them in the high impedance mode. The receiver outputs are also placed in the high impedance state when in shutdown mode.

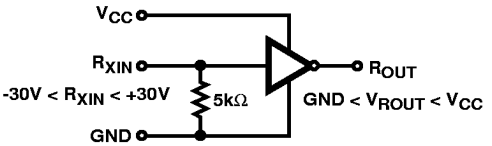

FIGURE 3. RECEIVER

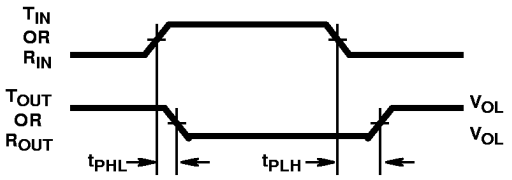

$$\text{Average Propagation Delay} = \frac{t_{PHL} + t_{PLH}}{2}$$

FIGURE 4. PROPAGATION DELAY DEFINITION

This Material Copyrighted By Its Respective Manufacturer

Typical Performance Curves

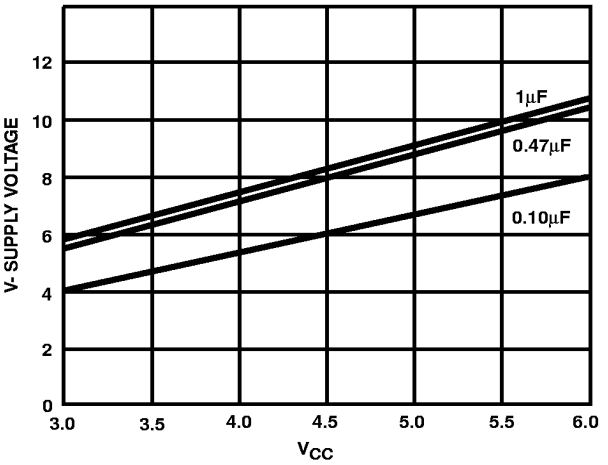

FIGURE 5. V- SUPPLY VOLTAGE vs V_{CC}, VARYING CAPACITORS

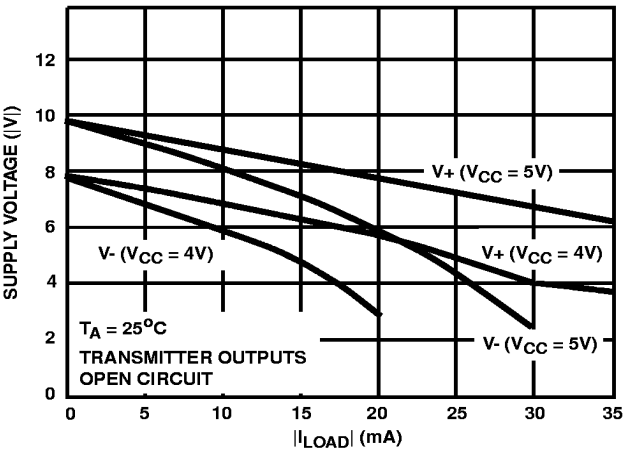

FIGURE 6. V+, V- OUTPUT VOLTAGE vs LOAD

Test Circuits (HIN232)

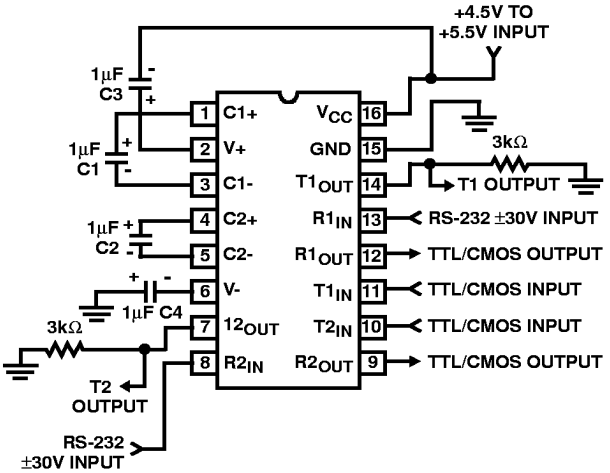

FIGURE 7. GENERAL TEST CIRCUIT

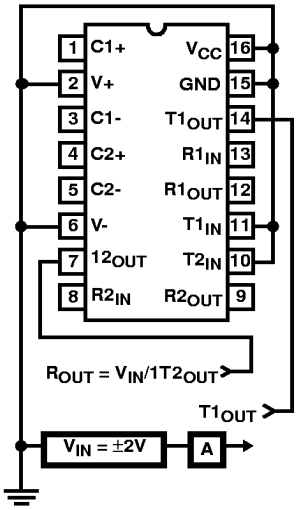

FIGURE 8. POWER-OFF SOURCE RESISTANCE CONFIGURATION

This Material Copyrighted By Its Respective Manufacturer

Applications

The HINXXX may be used for all RS-232 data terminal and communication links. It is particularly useful in applications where ±12V power supplies are not available for conventional RS-232 interface circuits. The applications presented represent typical interface configurations.

A simple duplex RS-232 port with CTS/RTS handshaking is illustrated in Figure 9. Fixed output signals such as DTR (data terminal ready) and DSRS (data signaling rate select) is generated by driving them through a 5kΩ resistor connected to V+.

In applications requiring four RS-232 inputs and outputs (Figure 10), note that each circuit requires two charge pump capacitors (C1 and C2) but can share common reservoir capacitors (C3 and C4). The benefit of sharing common reservoir capacitors is the elimination of two capacitors and the reduction of the charge pump source impedance which effectively increases the output swing of the transmitters.

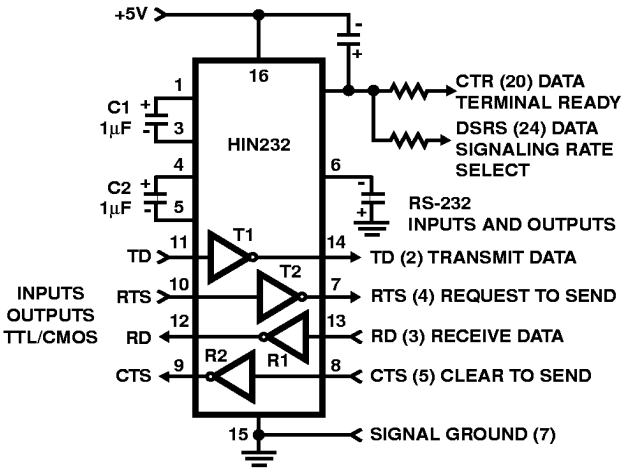

FIGURE 9. SIMPLE DUPLEX RS-232 PORT WITH CTS/RTS HANDSHAKING

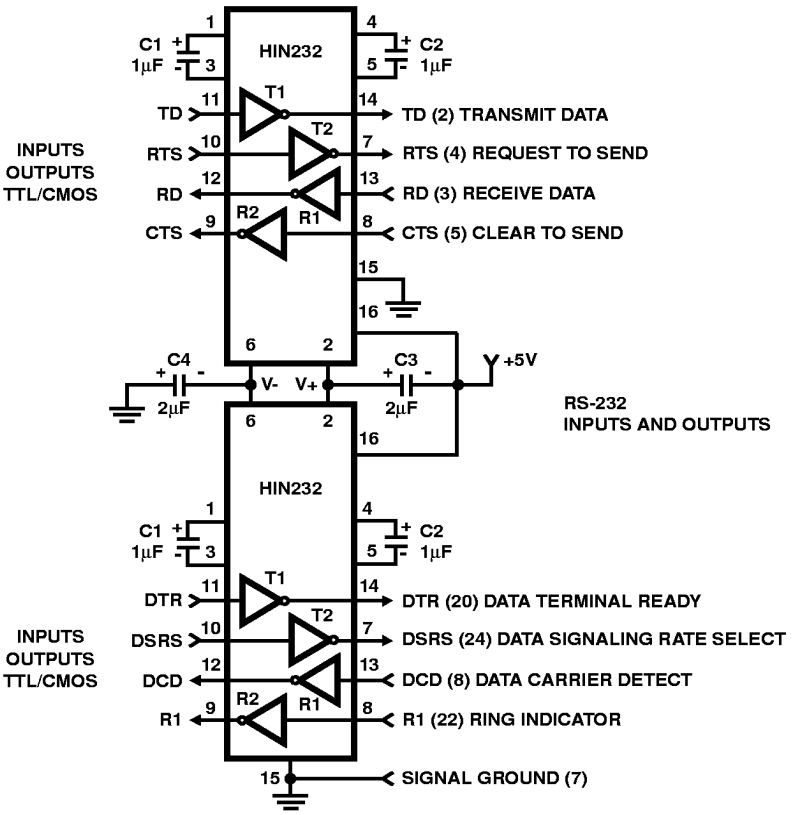

FIGURE 10. COMBINING TWO HIN232s FOR 4 PAIRS OF RS-232 INPUTS AND OUTPUTS

This Material Copyrighted By Its Respective Manufacturer

Die Characteristics

DIE DIMENSIONS:

160 mils x 140 mils

METALLIZATION:

Type: Al
Thickness: 10kÅ ±1kÅ

SUBSTRATE POTENTIAL

V+

PASSIVATION:

Type: Nitride over Silox
Nitride Thickness: 8kÅ
Silox Thickness: 7kÅ

TRANSISTOR COUNT:

238

PROCESS:

CMOS Metal Gate

Metallization Mask Layout

HIN240

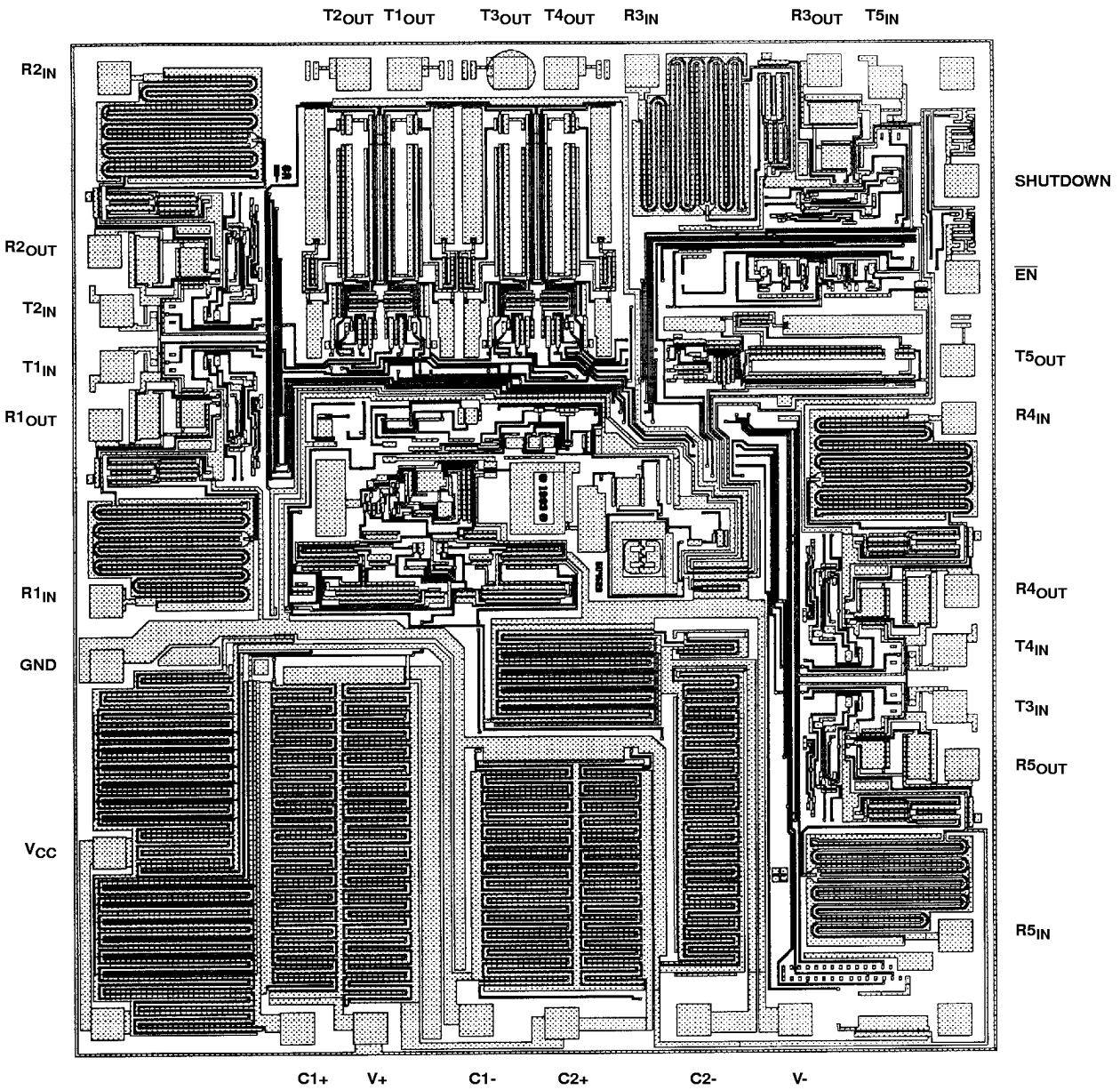

This Material Copyrighted By Its Respective Manufacturer