SGS-THOMSON MICROELECTRONICS

TDA7338

STEREO DECODER

- INTEGRATED 19KHz SC NOTCH FILTER FOR PILOT CANCELLATION
- ON CHIP FILTER FOR PILOT DETECTOR AND PLL
- ADJUSTMENT FREE VOLTAGE CONTROLLED OSCILLATOR
- AUTOMATIC PILOT DEPENDENT MONO/ STEREO SWITCHING
- NOISE BLANKING WITH PROGRAMMABLE THRESHOLD
- HIGH CUT CONTROL AND STEREO BLEND
- INTEGRATED HIGH PASS FILTER FOR INTERFERENCE DETECTOR
- LEVEL INPUT FOR ADDITIONAL SPIKE DETECTION ON FIELDSTRENGHT SIGNAL
- VERY HIGH SUPPRESSION OF HARMONIC AND INTERFERENCE SIGNALS

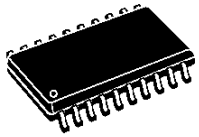

SO20

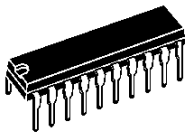

DIP20

ORDERING NUMBER: TDA7338(DIP20)
TDA7338D(SO20)

DESCRIPTION

The TDA7338 is a new concept of monolithic integrated stereo decoder with noise blanking for FM car radio applications.

With the used BICMOS technique, the 19KHz Notch Filter, the PLL Filter and Phase Filter is realized on the chip with a Switched Capacitor concept.

Avoiding the use of multipliers and non linear circuits a very high performance in terms of noise suppression and total harmonic distortion is reached.

PIN CONNECTION (Top view)

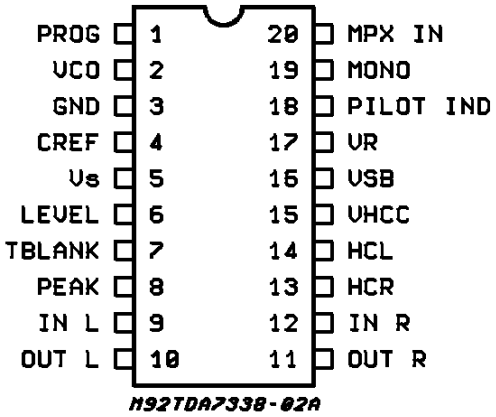

This is advanced information on a new product now in development or undergoing evaluation. Details are subject to change without notice.

ABSOLUTE MAXIMUM RATINGS

Symbol	Parameter	Value	Unit
V_{CC}	DC Supply Voltage	10.5	V
I_{CC}	Supply Current	20	mA
T_{stg}	Storage temperature	-55 to 150	°C
T_{amb}	Operating ambient temperature	-40 to 85	°C

THERMAL DATA

Symbol	Description		DIP 20	SO 20	Unit
$R_{thj\text{-}pins}$	Thermal resistance junction-pins	Typ	100	200	°C/W

ESD
All pins are protected against ESD according to the MIL883 standard.

BLOCK DIAGRAM AND TEST CIRCUIT

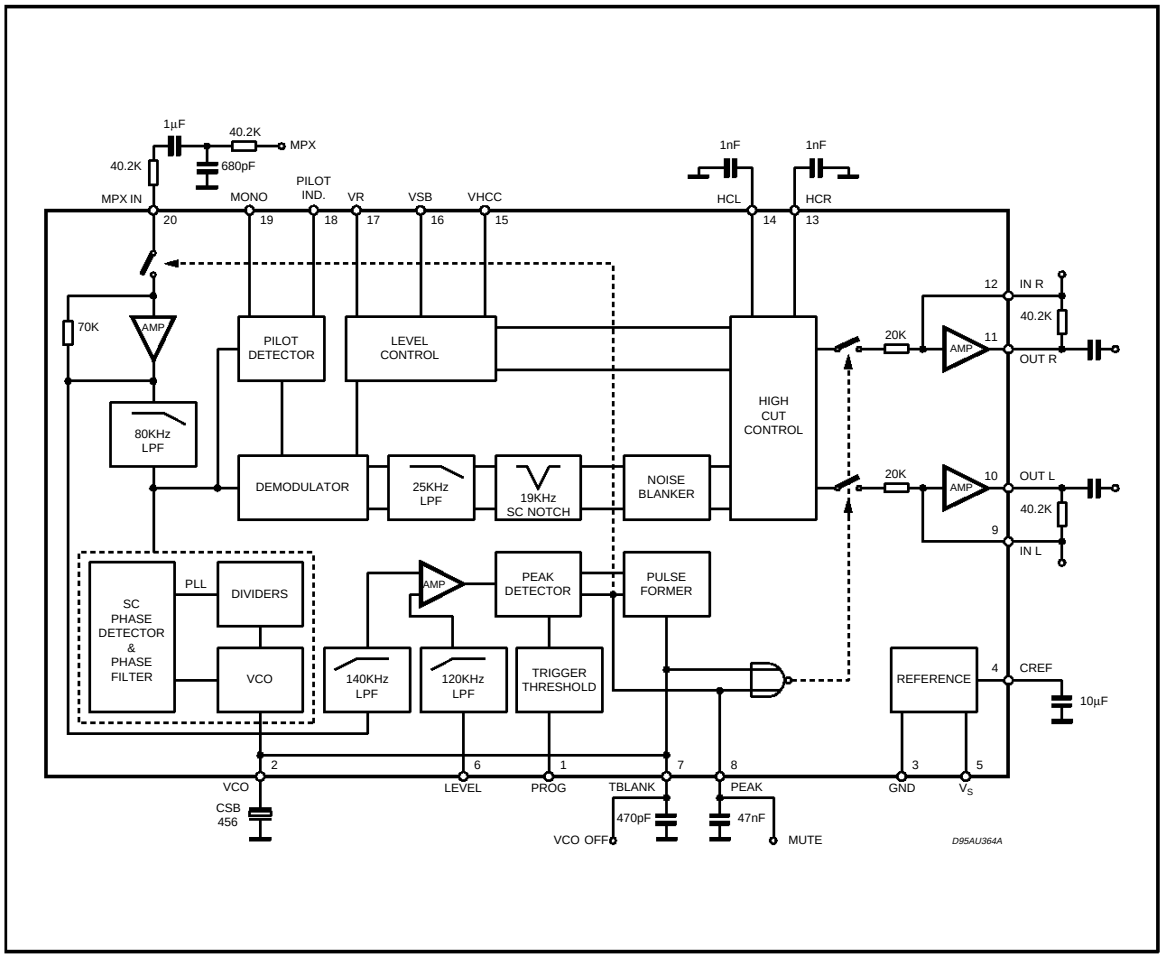

ELECTRICAL CHARACTERISTICS (V_{CC} = 9V; modulation frequency: 1KHz; de-emphasis time: T = 50µs; nominal MPX input voltage: V_{MPX} = 1.5V_{PP}; m 100% (75KHz deviation, f_{mod} = 1KHz); T_{amb} = 27°C; C_{REF} = 4.7µF; unless otherwise specified)

Symbol	Parameter	Test Condition	Min.	Typ.	Max.	Unit
V_{CC}	Supply Voltage		7.5	9	10.2	V
I_{CC}	Supply Current		5	10	15	mA
V_{IN}	MPX Input Level (peak to peak)	fm = 1KHz		1.5		V
V_{ORMS}	A.F. Output Voltage (mono)	pin 10 and 11V_{IN} = 0.5V_{RMS} MONO;		1.5		V
SVRR	Supply Voltage Ripple Rejection	V_{RIPPLE} = 200mV; f = 1KHz	40	55		dB
V_L/V_R	Difference of Output Voltage Levels	pin 10 and 11- mono	-0.8		0.8	dB
V_o/V_i	Gain	V_{10}/V_{20}	8.5	9.5	10.5	dB
R_O	Output Resistance	pin 10 and 11		10	50	Ω
V_O	DC Output Voltage	pin 10 and 11	4.2	4.5	4.8	V
α	Channel Separation	V_R - V_{SB} = -50mV_{DC}	30	45		dB
THD	Total Harmonic distortion			0.02	0.3	%
$\frac{S+N}{N}$	Signal plus noise to noise ratio	f = 20Hz to 16KHz; S = 2Vrms		91		dB
α_M	Muting Attenuation	V_7 and $V_8 \leq$ 0.6V		100		dB
V_{DC}	Mute DC Steps at pins 10, 11	Mute at pin 8		1	15	mV

CARRIER AND HARMONIC SUPPRESSION AT THE OUTPUT

α19	Pilot Signal f = 19KHz		55	70		dB
α38	Subcarrier f = 38KHz			75		dB
α57	Subcarrier f = 57KHz			62		dB
α76	Subcarrier f = 76KHz			90		dB

INTERMODULATION (note 1)

α2	f_{mod} = 10KHz; f_{spur} = 1KHz			65		dB
α3	f_{mod} = 13KHz; f_{spur} = 1KHz			75		dB

TRAFFIC RADIO (note 2)

α57	Signal f = 57KHz			70		dB

SCA - SUBSIDIARY COMMUNICATIONS AUTHORIZATION (note 3)

α67	Signal f = 67KHz			75		dB

ACI - ADJACENT CHANNEL INTERFERENCE (note4)

α114	Signal f = 114KHz			95		dB
α190	Signal f = 190KHz			84		dB

MONO/ STEREO SWITCH

V_{INTH}	Pilot Threshold Voltage	for stereo "ON"	16	22	28	mV_{RMS}
V_{INTH}	Pilot Threshold Voltage	for stereo "OFF"	11	16	21	mV_{RMS}
V_{PI}	Pilot Indicator Saturation Voltage	I = 1mA		0.2	0.5	V
I_{PI}	Pilot Indicator Leakage Current	V = 9V			10	µA
V_{19}	Control Voltage for forced mono	α = < 3dB			0.8	V

STEREO BLEND

V_{16-17}	Control Voltage for Channel Separation	α = 6dB; V_R = 3.6V (note 5)	-0.31	-0.27	-0.23	V
V_{16-17}	Control Voltage for Channel Separation	α = 26dB;	-85	-55	-30	mV

ELECTRICAL CHARACTERISTICS (continued)

HIGH CUT CONTROL

Symbol	Parameter	Test Condition	Min.	Typ.	Max.	Unit
τ_{deemp}	De-Emphasis Time Constant	C_{13}, C_{14} = 1nF; V_{15-17} = 50mV	43	50	57	µs
R_{15-17}	High Cut Control Resistance	V_{15-17} = 50mV	43	50	57	KΩ
R_{15-17}	High Cut Control Resistance	V_{15-17} = -0.5V (note 5)	115	150	185	KΩ

VCO

f_{osc}	Oscillator Frequency	with Murata CSB456F11		456		KHz
$\Delta f/f$	Capture and Holding Range			±1		%
V_{VCO}	$V_{CO\ OFF}$	Pin 7			0.6	V

NOISE INTERFACE DETECTOR (test condition: $V_{SB} > V_R + 50mV$)

V_{TR}	Trigger Threshold (note 6)	V_{PEAK} = 1.3V; PROG = GND		180		mV
		V_{PEAK} = 1.3V; PROG = OPEN/V_{DD}		250		mV
V_{TR}	Trigger Threshold	V_{PEAK} = 1.5V; PROG = GND		260		mV
		V_{PEAK} = 1.5V; PROG = OPEN/V_{DD}		340		mV
T_S	Suppression Pulse Duration	C_{BLANK} = 470pF		50		µs
I_{OS}	Input Offset Current during suppression time			10		pA
V_{N1}	V_{PEAK} (pin 8)	V_{IN} = 0mV_{RMS}	0.7	1.0	1.3	V
V_{N2}	V_{PEAK} (pin 8)	V_{IN} = 50mV_{RMS}; f = 150KHz	1.1	1.5	1.9	V
V_{N3}	V_{PEAK} (pin 8)	V_{IN} = 100mV_{RMS}; f = 150KHz	1.7	2.1	2.5	V

NOTES TO THE CHARACTERISTICS

1 INTERMODULATION SUPPRESSION

$$\alpha 2 = \frac{V_O\ (signal)\ (at1KHz)}{V_O\ (spurious)\ (at1KHZ)}\ ;\ f_s = (2 \times 10KHz) - 19KHz$$

$$\alpha 3 = \frac{V_O\ (signal)\ (at1KHz)}{V_O\ (spurious)\ (at1KHZ)}\ ;\ f_s = (3 \times 13KHz) - 38KHz$$

measured with : 91% mono signal; 9% pilot signal; fm=10KHz or 13KHz

2. TRAFFIC RADIO (V.F.) suppression

$$\alpha 57\ (V.W.F.) = \frac{V_{O(signal)}\ (at1KHz)}{V_O\ (spurious)\ (at1KHZ \pm 23Hz)}$$

measured with : 91% stereo signal; 9% pilot signal; fm=1KHz; 5% subcarrier (f=57KHz, fm = 23Hz AM, m = 60%)

3. SCA (SUBSIDIARY COMMUNICATIONS AUTHORIZATION)

$$\alpha 67 = \frac{V_{O(signal)}\ (at1KHz)}{V_O\ (spurious)\ (at9KHZ)}\ ;\ f_s = (2 \times 38KHz) - 67KHz$$

measured with : 81% mono signal; 9% pilot signal; fm=1KHz; 10% SCA - subcarrier (f_s = 67KHz, unmodulated)

NOTES TO THE CHZARACTERISTICS (continued)

4. ACI (ADJACENT CHANNEL INTERFERENCE)

$$\alpha 114 = \frac{V_O\ (signal)\ (at1KHz)}{V_O\ (spurious)\ (at4KHZ)}\ ;\ f_s = 110KHz - (3 \times 38KHz)$$

$$\alpha 190 = \frac{V_O\ (signal)\ (at1KHz)}{V_O\ (spurious)\ (at4KHZ)}\ ;\ f_s = 186KHz - (5 \times 38KHz)$$

measured with : 90% mono signal; 9% pilot signal; fm=1KHz; 1% spurious signal
(f_s = 110KHz or 186KHz, unmodulated)

5. Control range typ 11% of V_R (see figure 1 and figure2)

6. MEASUREMENT OF TRIGGER THRESHOLDS

All thresholds are measured by using a pulse with T_R = 2µs, T_{HIGH} = 2µs, and T_F = 10µs. The repetition rate must not increase the PEAK voltage.

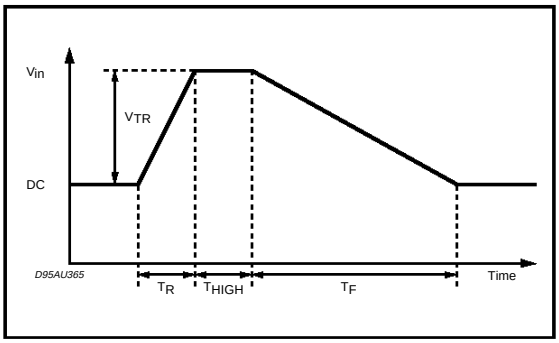

FUNCTIONAL DESCRIPTION

Signal Path

The TDA7338 Stereodecoder contains all necessary functions for processing the MPX signal. Due to the external input resistance (Pin 20) the circuit can be adapted to different MPX input levels. Behind a 80kHz lowpass filter the adjustment free PLL for the pilot Tone is placed. The only external component needed for the PLL is the ceramic resonator for the oscillator which runs at 456kHz.

The pilot detector output is designed as an open collector output, therefore an external pullup resistor is needed. To force the decoder to "MONO" Pin 19 has to be clamped to a voltage below 0.8V.

The voltage level (signal strength from the IF part) applied to Pin 15 (VHCC) allows to control the time constant of the deemphasis (nom. = 50µs, see fig. 1). If the RF-signal is weak, the corner

Figure 1: High Cut Control

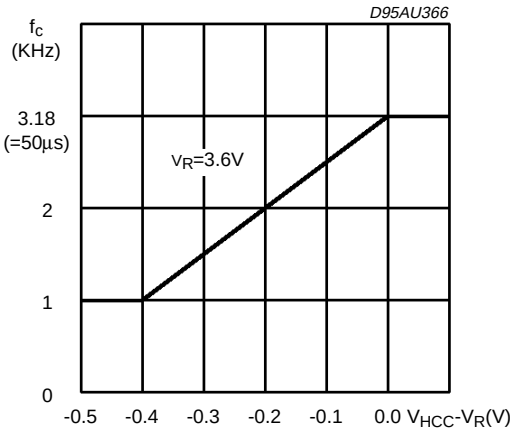

Figure 2: Stereo Blend

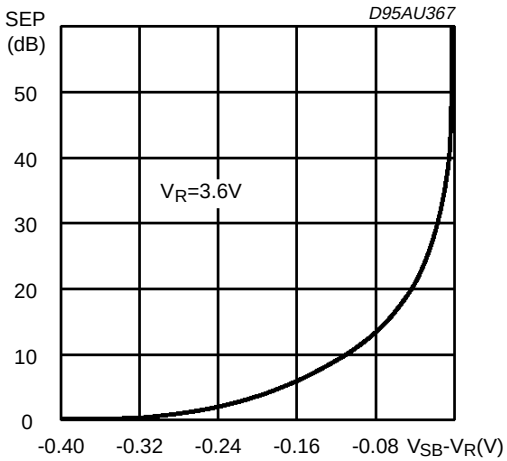

frequency is reduced down to 1kHz to improve the signal to noise ratio. Furthermore the conditions of the stereo separation (see fig.2) can be controlled through the signal applied to Pin 16 (VSB). Both signal levels (VSB and VHCC) are referred to Pin 17 (VR), with the characteristic that the control range is 11% of V_R.

By modifying the feedback resistor value of the output stages (Pin 9 - 10, Pin 11 - 12) the total gain of the stereodecoder can be modified.

Pin 7 and Pin 8 have an additional function. By pulling them to ground the VCO-OFF (Pin 7) and the MUTE (Pin 8) function are activated. The MUTE signal disconnects the MPX-signal from the circuit, while in combination with VCO-OFF also the output buffers are disconnected from the circuit. In this mode the output buffers can be used for AM-stereo, cassette play back and other purposes.

AM Mono Mode

By selecting VCO-OFF (Pin 7 to GND) the VCO is switched off and the SB and HCC are disabled. The deemphasis time constant is changed to 40µs (f_c = 4KHz).

DESCRIPTION OF THE NOISE BLANKER

In the normal automotive environment the MPX signal is disturbed by ignition spikes, motors and high frequency switches etc.

The aim of the noise blanker part is to cancel the influence of the spikes produced by these components. Therefore the output of the stereodecoder is switched off for a time of 40µs (average spike duration).
In a first stage the spikes must be detected but to avoid a wrong triggering on high frequency noise a complex trigger control is implemented.

Behind the trigger stage a pulse former generates the 40µs "blanking" pulse.
This duration of 40µs can be varied by changing the capacitor at pin 7.

1.1 Trigger Path

The incoming MPX signal is highpass-filtered, amplified and rectified (block RECT-PEAK).
The second order highpass-filter has a corner-frequency of 140KHz.

The rectifier signal, RECT, is used to generate by peak-rectification a signal called PEAK, which is available at the PEAK pin 8.

Also noise with a frequency >100KHz increases the PEAK voltage. The value of the PEAK voltage influences the trigger threshold voltage Vth (block ATC). The higher the noise level the higher the threshold.

Both signals, RECT and PEAK+Vth are fed to a comparator (block PEAK-COMP) which outputs a sawtooth-shaped waveform at the TBLANK pin 7. A second comparator (block BLANK-COMP) forms the internal blanking duration of 40µs.

The noise blanker is supplied by his own biasing circuit (block BIAS-MONO) to avoid any cross talk to the signal path (block BIAS-MONO).

1.2 Noise Controlled Threshold Adjustment (ATC)

The behaviour of the noise controlled threshold adjustment is shown in fig. 4. It can be influenced slightly by adding a resistor in parallel to the PEAK capacitor at Pin 8 either to GND or V_{DD}. A resistor to GND will decrease the threshold whereas a resistor to V_{DD} will increase it. But it is recommended to choose one of the internal thresholds by use of the PROG pin (see table 1)

1.3 Automatic Threshold Control by the Stereoblend voltage (ATC-SB)

Besides the noise controlled threshold adjustment there is an additional possibility for influencing the trigger. It is controlled by the difference between Vsb and Vr, similar to the Stereoblend. The reason for implementing such a second control will be explained in the following:

The point where the MPX signal starts to become noisy is fixed by the RF part. Therefore also the starting point of the normal noise controlled trigger adjustment is fixed (fig.5). But in some cases the behaviour of the noiseblanker can be improved by increasing the threshold even in a region of higher fieldstrength, for the MPX signal often shows distortion in this range, which leads to an undesired triggering.
Because of the overlap of this range and the range of the stereo/mono transition it can be controlled by Vsb and Vr. This threshold increase is programmable (see fig. 5).

1.4 Blend Mode

Another possibility to avoid a disturbing triggering on modulation is to use the spikes on the fieldstrength signal (LEVEL pin). But in the range of higher fieldstrength the signal saturates and no more spike detection is possible. For this reason the TDA7338 offers the "BLEND MODE". When "BLEND MODE" is activated a smooth transition between the LEVEL- and the MPX-signal is used to detect the spikes either on LEVEL or on MPX.

In the lower fieldstrength range mainly the LEVEL-signal is used whereas in the higher range mainly the MPX is used. This switching is controlled also by the normal Stereoblend signal to avoid additional pins.

"BLEND MODE OFF" is activated by connecting the LEVEL pin to GND (LEVEL must be also connected to GND if not used).

Figure 3: Block Diagram of the Noise Blanker

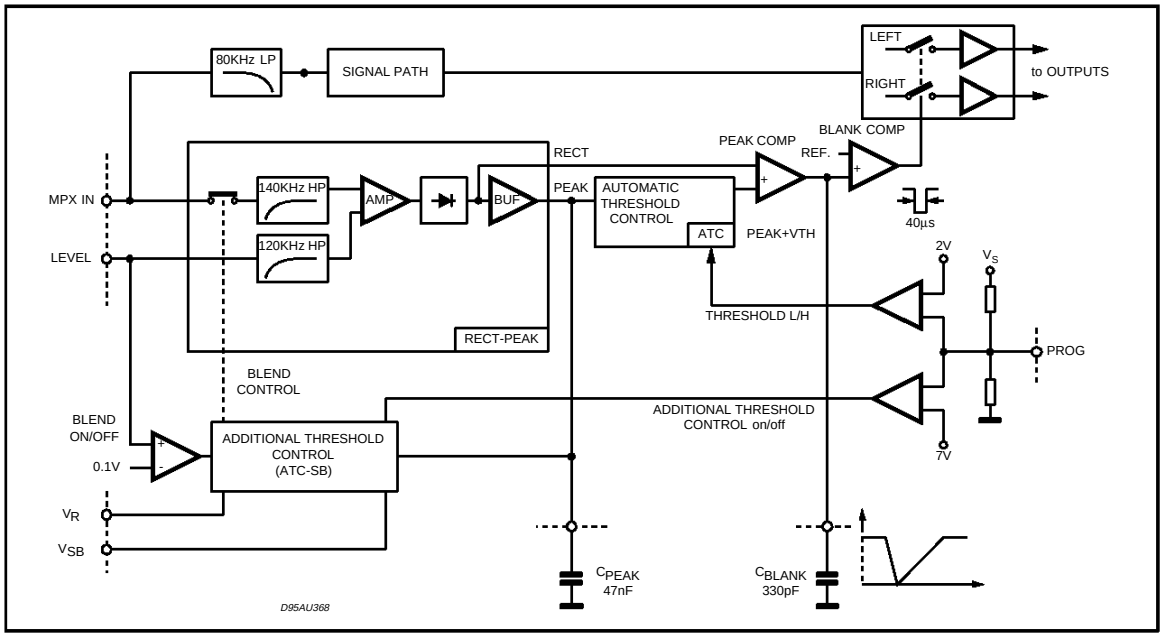

Table 1: Programming of the Noiseblanker

PIN 1 (PROG)	Trigger Threshold	Peak Voltage Control By Fieldstrength
GND	LOW	ON
OPEN	HIGH	ON
V_{DD}	HIGH	OFF

Figure 4: Trigger Threshold vs. V_{PEAK}

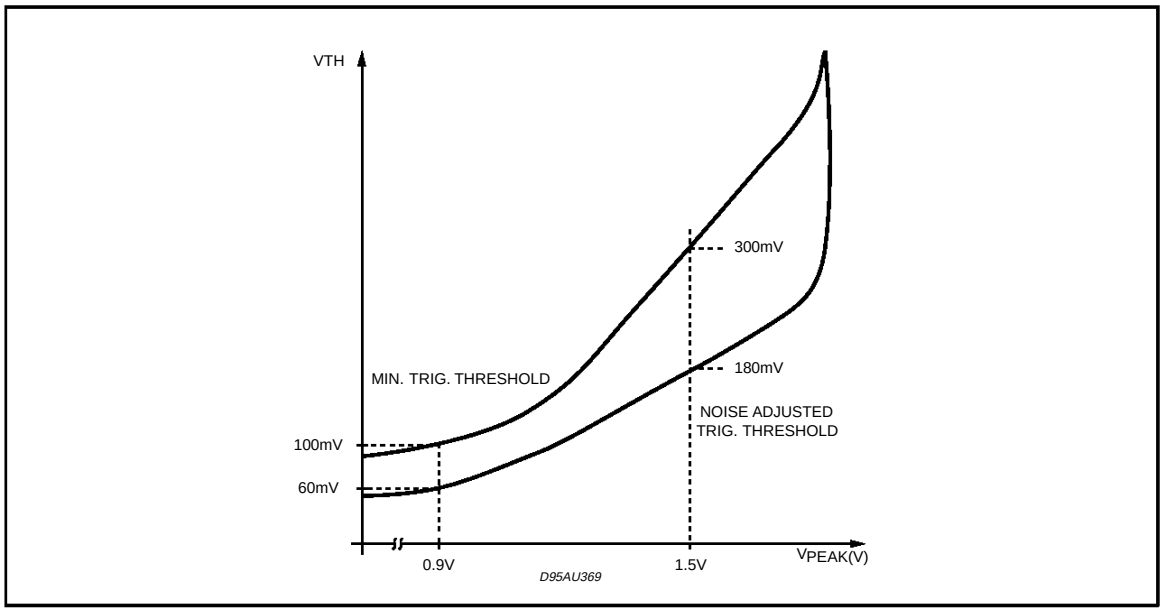

Figure 5: Behaviour of the Field Strength Controlled Threshold Adiustment

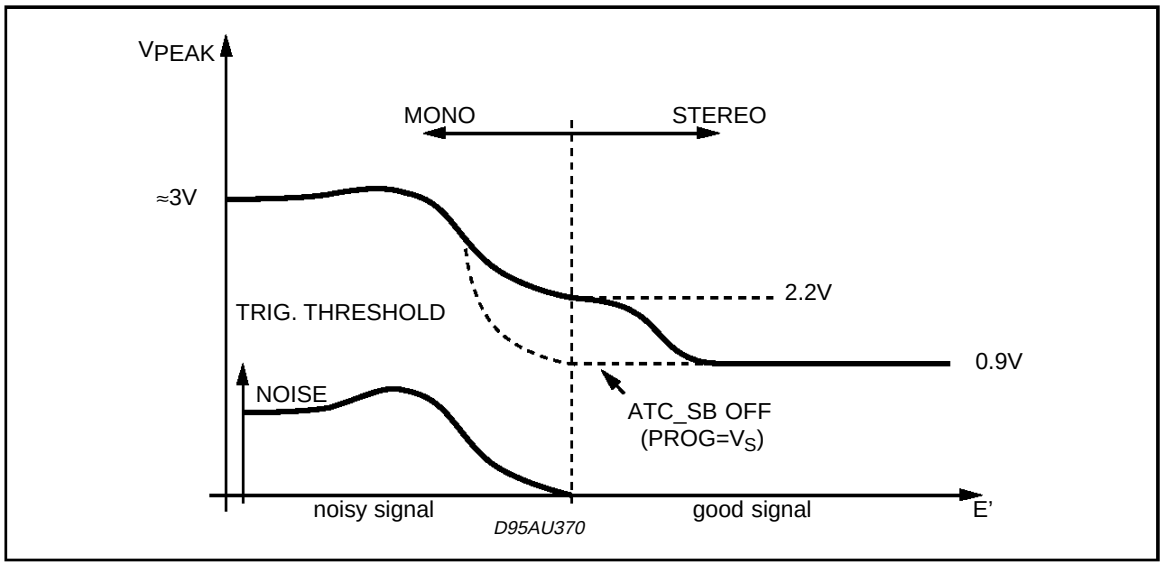

Figure 6: Application Diagram

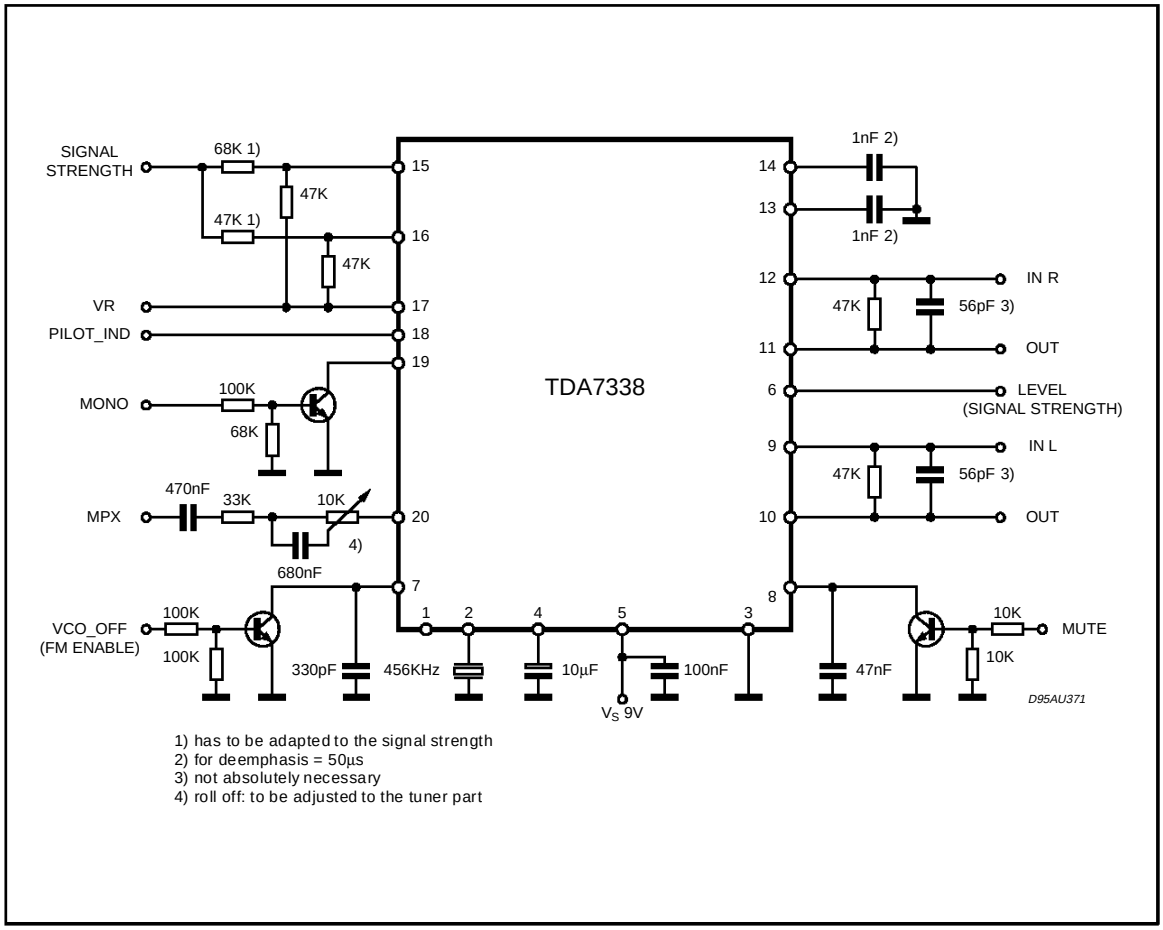

SO20 PACKAGE MECHANICAL DATA

DIM.	mm			inch		
	MIN.	TYP.	MAX.	MIN.	TYP.	MAX.
A			2.65			0.104
a1	0.1		0.3	0.004		0.012
a2			2.45			0.096
b	0.35		0.49	0.014		0.019
b1	0.23		0.32	0.009		0.013
C		0.5			0.020	
c1	45 (typ.)					
D	12.6		13.0	0.496		0.512
E	10		10.65	0.394		0.419
e		1.27			0.050	
e3		11.43			0.450	
F	7.4		7.6	0.291		0.299
L	0.5		1.27	0.020		0.050
M			0.75			0.030
S	8 (max.)					

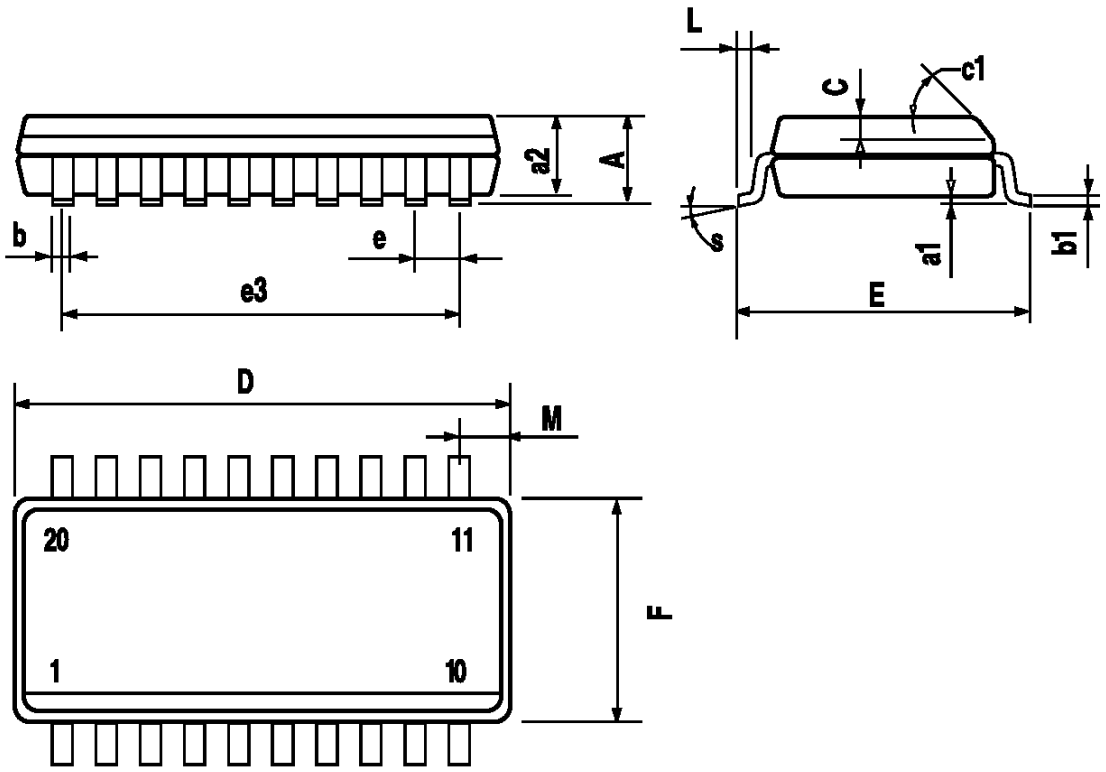

DIP20 PACKAGE MECHANICAL DATA

DIM.	mm			inch		
	MIN.	TYP.	MAX.	MIN.	TYP.	MAX.
a1	0.254			0.010		
B	1.39		1.65	0.055		0.065
b		0.45			0.018	
b1		0.25			0.010	
D			25.4			1.000
E		8.5			0.335	
e		2.54			0.100	
e3		22.86			0.900	
F			7.1			0.280
I			3.93			0.155
L		3.3			0.130	
Z			1.34			0.053

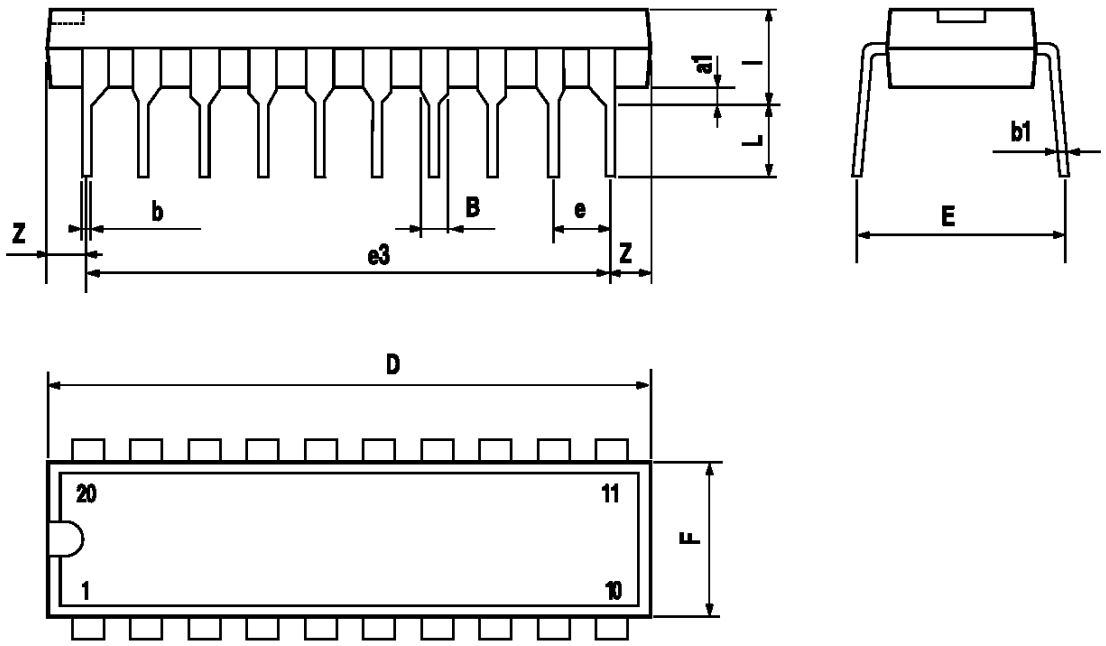

Information furnished is believed to be accurate and reliable. However, SGS-THOMSON Microelectronics assumes no responsibility for the consequences of use of such information nor for any infringement of patents or other rights of third parties which may result from its use. No license is granted by implication or otherwise under any patent or patent rights of SGS-THOMSON Microelectronics. Specification mentioned in this publication are subject to change without notice. This publication supersedes and replaces all information previously supplied. SGS-THOMSON Microelectronics products are not authorized for use as critical components in life support devices or systems without express written approval of SGS-THOMSON Microelectronics.

© 1995 SGS-THOMSON Microelectronics – Printed in Italy – All Rights Reserved

SGS-THOMSON Microelectronics GROUP OF COMPANIES
Australia - Brazil - Canada - China - France - Germany - Hong Kong - Italy - Japan - Korea - Malaysia - Malta - Morocco - The Netherlands - Singapore - Spain - Sweden - Switzerland - Taiwan - Thailand - United Kingdom - U.S.A.