FAIRCHILD SEMICONDUCTOR™

February 1992
Revised August 2000

100398
Quad Differential ECL/TTL Translating Transceiver with Latch

General Description

The 100398 is a quad latched transceiver designed to convert TTL logic levels to differential F100K ECL logic levels and vice versa. This device was designed with the capability of driving a differential 25Ω ECL load with cutoff capability, and will sink a 64 mA TTL load. The 100398 is ideal for mixed technology applications utilizing either an ECL or TTL backplane.

The direction of translation is set by the direction control pin (DIR). The DIR pin on the 100398 accepts TTL logic levels. A TTL LOW on DIR sets up the ECL pins as inputs and TTL pins as outputs. A TTL HIGH on DIR sets up the TTL pins as inputs and ECL pins as outputs.

A LOW on the output enable input pin (OE) holds the ECL output in a cut-off state and the TTL outputs at a high impedance level. A HIGH on the latch enable input (LE) latches the data at both inputs even though only one output is enabled at the time. A LOW on LE makes the latch transparent.

The cut-off state is designed to be more negative than a normal ECL LOW level. This allows the output emitter-followers to turn off when the termination supply is –2.0V, presenting a high impedance to the data bus. This high impedance reduces termination power and prevents loss of low state noise margin when several loads share the bus.

The 100398 is designed with FAST™ TTL output buffers, featuring optimal DC drive and capable of quickly charging and discharging highly capacitive loads. All Inputs have 50 kΩ pull-down resistors.

Features

- Differential ECL input/output structure
- 64 mA FAST TTL outputs
- 25Ω differential ECL outputs with cut-off
- Bi-directional translation
- 2000V ESD protection
- Latched outputs
- 3-STATE outputs
- Voltage compensated operating range = –4.2V to –5.7V

Ordering Code:

Order Number	Package Number	Package Description
100398PC	N24E	24-Lead Plastic Dual-In-Line Package (PDIP), JEDEC MS-010, 0.400 Wide
100398QC	V28A	28-Lead Plastic Lead Chip Carrier (PLCC), JEDEC MO-047, 0.450 Square
100398QI	V28A	28-Lead Plastic Lead Chip Carrier (PLCC), JEDEC MO-047, 0.450 Square Industrial Temperature Range (–40°C to +85°C)

Devices also available in Tape and Reel. Specify by appending the suffix letter "X" to the ordering code.

FAST® is a registered trademark of Fairchild Semiconductor.

© 2000 Fairchild Semiconductor Corporation

Logic Symbol

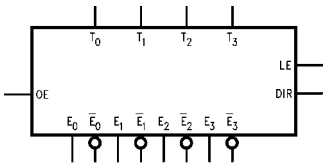

Connection Diagrams

24-Pin DIP

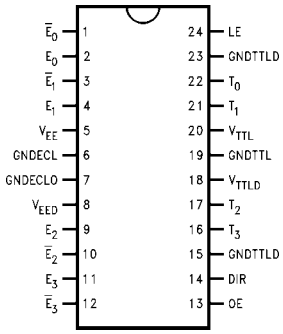

28-Pin PLCC

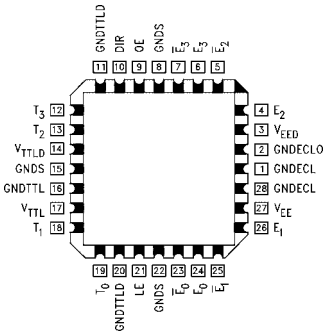

Pin Descriptions

Pin Names	Description
E_0–E_3	ECL Data I/O
E_0–E_3	Complementary ECL Data I/O
T_0–T_3	TTL Data I/O
OE	Output Enable Input Levels
LE	Latch Enable Input Levels
DIR	Direction Control Input (TTL levels)
GNDECL	ECL Ground
GNDECLO	ECL Output Ground
GNDS	ECL Ground-to-Substrate
V_{EE}	ECL Quiescent Power Supply
V_{EED}	ECL Dynamic Power Supply
GNDTTL	TTL Quiescent Ground
GNDTTLD	TTL Dynamic Ground
V_{TTL}	TTL Quiescent Power Supply
V_{TTLD}	TTL Dynamic Power Supply

Truth Table

LE	DIR	OE	ECL Port	TTL Port	Notes
0	0	0	LOW (Cut-Off)	Z	
0	0	1	Input	Output	(Note 1)(Note 4)
0	1	0	LOW (Cut-Off)	Z	
0	1	1	Output	Input	(Note 2)(Note 4)
1	0	0	Input	Z	(Note 1)(Note 3)
1	0	1	Latched	X	(Note 1)(Note 3)
1	1	0	Low (Cut-Off)	Input	(Note 2)(Note 3)
1	1	1	Latched	X	(Note 2)(Note 3)

H = HIGH Voltage Level
L = LOW Voltage Level
X = Don't Care
Z = High Impedance

Note 1: ECL input to TTL output mode.

Note 2: TTL input to ECL output mode.

Note 3: Retains data present before LE set HIGH.

Note 4: Latch is transparent.

Functional Diagram

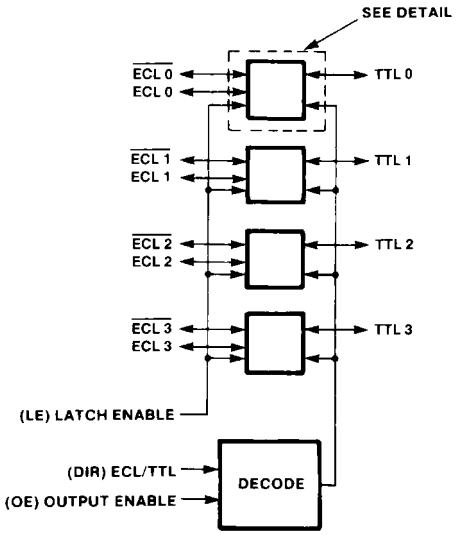

Detail

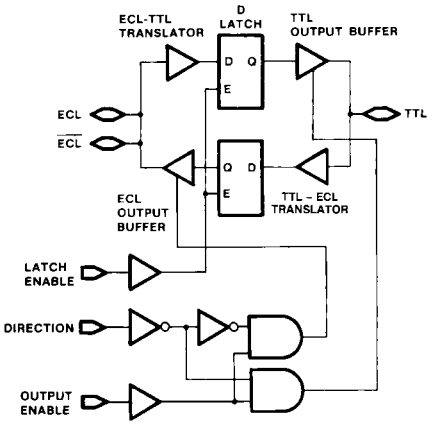

Note: LE, and OE use TTL logic levels

Absolute Maximum Ratings (Note 5)

Storage Temperature (T_{STG})	−65°C to +150°C
Maximum Junction Temperature (T_J)	+150°C
V_{EE} Pin Potential to Ground Pin	−7.0V to +0.5V
V_{TTL} Pin Potential to Ground Pin	−0.5V to +6.0V
ECL Input Voltage (DC)	V_{EE} to +0.5V
ECL Output Current (DC Output HIGH)	−50 mA
TTL Input Voltage (Note 6)	−0.5V to +7.0V
TTL Input Current (Note 6)	−30 mA to +5.0 mA
Voltage Applied to Output in HIGH State 3-STATE Output	−0.5V to +5.5V
Current Applied to TTL Output in LOW State (Max)	twice the Rated I_{OL} (mA)
ESD (Note 7)	≥ 2000V

Recommended Operating Conditions

Case Temperature (T_C)	
Commercial	0°C to +85°C
Industrial	−40°C to +85°C
ECL Supply Voltage (V_{EE})	−5.7V to −4.2V
TTL Supply Voltage (V_{TTL})	+4.5V to +5.5V

Note 5: The "Absolute Maximum Ratings" are those values beyond which the safety of the device cannot be guaranteed. The device should not be operated at these limits. The parametric values defined in the Electrical Characteristics tables are not guaranteed at the absolute maximum rating. The "Recommended Operating Conditions" table will define the conditions for actual device operation.

Note 6: The specified limits represent the "worst case" value for the parameter. Since these values normally occur at the temperature extremes, additional noise immunity and guardbanding can be achieved by decreasing the allowable system operating ranges. Conditions for testing shown in the tables are chosen to guarantee operation under "worst case" conditions.

Note 7: ESD testing conforms to MIL-STD-883, Method 3015.

Commercial Version

TTL-to-ECL DC Electrical Characteristics (Note 9)

V_{EE} = −4.2V to −5.7V, GND = 0V, T_C = 0°C to +85°C, V_{TTL} = +4.5V to +5.5V

Symbol	Parameter	Min	Typ	Max	Units	Conditions
V_{OH}	Output HIGH Voltage	−1025	−955	−870	mV	$V_{IN} = V_{IH(Max)}$ or $V_{IL(Min)}$
V_{OL}	Output LOW Voltage	−1830	−1705	−1620	mV	Loading with 50Ω to − 2V
	Cutoff Voltage		−2000	−1950	mV	OE and LE LOW, DIR HIGH $V_{IN} = V_{IH(Max)}$ or V_{IL}(Min), Loading with 50Ω to −2V
V_{OHC}	Output HIGH Voltage Corner Point High	−1035			mV	$V_{IN} = V_{IH(Min)}$ or $V_{IL(Max)}$ Loading with 50Ω to −2V
V_{OLC}	Output LOW Voltage Corner Point Low			−1610	mV	
V_{IH}	Input HIGH Voltage	2.0		5.0	V	Over V_{TTL}, V_{EE}, T_C Range
V_{IL}	Input LOW Voltage	0		0.8	V	Over V_{TTL}, V_{EE}, T_C Range
I_{IH}	Input HIGH Current			5.0	μA	V_{IN} = +2.7V
	Breakdown Test			0.5	mA	V_{IN} = +5.5V
I_{IL}	Input LOW Current	−700			μA	V_{IN} = +0.5V
V_{FCD}	Input Clamp Diode Voltage	−1.2			V	I_{IN} = −18 mA
I_{EE}	V_{EE} Supply Current	−99		−50	mA	LE LOW, OE and DIR HIGH Inputs Open
I_{EEZ}	V_{EE} Supply Current	−159		−90	mA	LE and OE LOW, DIR HIGH Inputs Open

Note 8: Either voltage limit or current limit is sufficient to protect inputs.

Note 9: The specified limits represent the "worst case" value for the parameter. Since these values normally occur at the temperature extremes, additional noise immunity and guardbanding can be achieved by decreasing the allowable system operating ranges. Conditions for testing shown in the tables are chosen to guarantee operation under "worst case" conditions.

Commercial Version (Continued)

ECL-to-TTL DC Electrical Characteristics (Note 10)

V_{EE} = –4.2V to –5.7V, GND = 0V, T_C = 0°C to +85°C, C_L = 50 pF, V_{TTL} = +4.5V to +5.5V

Symbol	Parameter	Min	Typ	Max	Units	Conditions
V_{OH}	Output HIGH Voltage	2.7	3.1		V	I_{OH} = –3 mA, V_{TTL} = 4.75V
		2.4	2.9		V	I_{OH} = –3 mA, V_{TTL} = 4.50V
V_{OL}	Output LOW Voltage		0.3	0.5	V	I_{OL} = 24 mA, V_{TTL} = 4.50V
V_{IH}	Input HIGH Voltage	–1165		–870	mV	Guaranteed HIGH Signal for All Inputs
V_{IL}	Input LOW Voltage	–1830		–1475	mV	Guaranteed LOW Signal for All Inputs
V_{DIFF}	Input Voltage Differential	150			mV	Required for Full Output Swing
V_{CM}	Common Mode Voltage	GNDECL – 2.0		GNDECL – 0.5	V	
I_{IH}	Input HIGH Current			30	µA	V_{IN} = V_{IH} (Max)
I_{IL}	Input LOW Current	0.50			µA	V_{IN} = V_{IL} (Min)
I_{OZHT}	3-STATE Current Output High			70	µA	V_{OUT} = +2.7V
I_{OZLT}	3-STATE Current Output Low	–650			µA	V_{OUT} = +0.5V
I_{OS}	Output Short-Circuit Current	–100		–225	mA	V_{OUT} = 0.0V, V_{TTL} = +5.5V
I_{CEX}	Output HIGH Leakage Current			50	µA	V_{OUT} = 5.5V
I_{ZZ}	Bus Drainage Test			500	µA	V_{OUT} = 5.25V
I_{TTL}	V_{TTL} Supply Current			39	mA	TTL Outputs LOW
				27	mA	TTL Outputs HIGH
				39	mA	TTL Outputs in 3-STATE

Note 10: The specified limits represent the "worst case" value for the parameter. Since these values normally occur at the temperature extremes, additional noise immunity and guardbanding can be achieved by decreasing the allowable system operating ranges. Conditions for testing shown in the tables are chosen to guarantee operation under "worst case" conditions.

DIP and PCC TTL-to-ECL AC Electrical Characteristics

V_{EE} = –4.2V to –5.7V, V_{TTL} = +4.5V to +5.5V

Symbol	Parameter	T_C = 0°C		T_C = 25°C		T_C = 85°C		Units	Conditions
		Min	Max	Min	Max	Min	Max		
f_{MAX}	Toggle Frequency	180		180		180		MHz	
t_{PLH} t_{PHL}	T_n to E_n, $\overline{E}_n$ (Transparent)	0.90	2.10	0.80	2.20	0.70	2.50	ns	Figures 1, 3
t_{PLH} t_{PHL}	LE to E_n, $\overline{E}_n$	1.40	2.70	1.50	2.70	1.80	3.10	ns	Figures 1, 3
t_{PZH}	OE to E_n, $\overline{E}_n$ (Cutoff to HIGH)	2.90	8.00	2.80	6.90	2.80	5.80	ns	Figures 1, 3
t_{PHZ}	OE to E_n, $\overline{E}_n$ (HIGH to Cutoff)	1.30	2.70	1.40	2.90	1.70	3.40	ns	Figures 1, 3
t_{PHZ}	DIR to E_n, $\overline{E}_n$ (HIGH to Cutoff)	1.30	2.70	1.40	2.90	1.80	3.50	ns	Figures 1, 3
t_S	T_n to LE	0.70		0.70		0.70		ns	Figures 1, 3
t_H	T_n to LE	0.90		0.80		0.70		ns	Figures 1, 3
t_{TLH} t_{THL}	Transition Time 20% to 80%, 80% to 20%	0.45	1.50	0.45	1.50	0.45	1.50	ns	Figures 1, 3

Commercial Version (Continued)
DIP and PCC ECL-to-TTL AC Electrical Characteristics

V_{EE} = −4.2V to −5.7V, V_{TTL} = +4.5V to +5.5V, C_L = 50 pF

Symbol	Parameter	T_C = 0°C		T_C = 25°C		T_C = 85°C		Units	Conditions
		Min	Max	Min	Max	Min	Max		
f_{MAX}	Toggle Frequency	75		75		75		MHz	
t_{PLH} t_{PHL}	E_n, $\overline{E}_n$ to T_n (Transparent)	1.70	4.90	1.70	5.10	1.80	5.80	ns	Figures 2, 4
t_{PLH} t_{PHL}	LE to T_n	2.30 3.30	4.60 5.50	2.40 3.50	4.70 5.70	2.60 4.00	4.90 6.70	ns	Figures 2, 4
t_{PZH} t_{PZL}	OE to T_n (Enable Time)	2.30 4.10	4.90 7.90	2.10 4.10	4.70 7.80	2.00 4.20	4.30 7.80	ns	Figures 2, 5
t_{PHZ} t_{PLZ}	OE to T_n (Disable Time)	3.30 4.10	7.90 7.50	3.30 4.30	7.50 7.80	3.70 5.30	7.90 9.40	ns	Figures 2, 5
t_{PHZ} t_{PLZ}	DIR to T_n (Disable Time)	2.00 2.00	6.00 4.00	1.90 2.00	5.70 3.70	1.70 1.90	5.20 3.70	ns	Figures 2, 6
t_S	E_n, $\overline{E}_n$ to LE	0.50		0.50		0.50		ns	Figures 2, 4
t_H	E_n, $\overline{E}_n$ to LE	1.00		1.00		1.00		ns	Figures 2, 4

Industrial Version

TTL-to-ECL DC Electrical Characteristics

V_{EE} = −4.2V to −5.7V, GND = 0V, T_C = −40°C to +85°C, V_{TTL} = +4.5V to +5.5V (Note 11)

Symbol	Parameter	Min	Typ	Max	Units	Conditions
V_{OH}	Output HIGH Voltage	−1085	−955	−870	mV	V_{IN} = $V_{IH(Max)}$ or $V_{IL(Min)}$
V_{OL}	Output LOW Voltage	−1830	−1705	−1575	mV	Loading with 50Ω to −2V
	Cutoff Voltage		−2000	−1900	mV	OE and LE Low, DIR High V_{IN}= $V_{IH(Max)}$ or $V_{IL(Min)}$, Loading with 50Ω to −2V
V_{OHC}	Output HIGH Voltage Corner Point HIGH	−1095			mV	V_{IN} = $V_{IH(Min)}$ or $V_{IL(Max)}$ Loading with 50Ω to −2V
V_{OLC}	Output LOW Voltage Corner Point LOW			−1565	mV	
V_{IH}	Input HIGH Voltage	2.0		5.0	V	Over V_{TTL}, V_{EE}, T_C Range
V_{IL}	Input LOW Voltage	0		0.8	V	Over V_{TTL}, V_{EE}, T_C Range
I_{IH}	Input HIGH Current			5.0	μA	V_{IN} = +2.7V
	Breakdown Test			0.5	mA	V_{IN} = +5.5V
I_{IL}	Input LOW Current	−700			μA	V_{IN} = +0.5V
V_{FCD}	Input Clamp Diode Voltage	−1.2			V	I_{IN} = −18 mA
I_{EE}	V_{EE} Supply Current	−99	−40		mA	LE Low, OE and DIR High Inputs Open

Note 11: The specified limits represent the "worst case" value for the parameter. Since these values normally occur at the temperature extremes, additional noise immunity and guardbanding can be achieved by decreasing the allowable system operating ranges. Conditions for testing shown in the tables are chosen to guarantee operation under "worst case" conditions.

Industrial Version (Continued)
ECL-to-TTL DC Electrical Characteristics (Note 12)

V_{EE} = −4.2V to −5.7V, GND = 0V, T_C = −40°C to +85°C, C_L = 50 pF, V_{TTL} = +4.5V to +5.5V

Symbol	Parameter	Min	Typ	Max	Units	Conditions
V_{OH}	Output HIGH Voltage	2.7	3.1		V	I_{OH} = −3 mA, V_{TTL} = 4.75V
		2.4	2.9		V	I_{OH} = −3 mA, V_{TTL} = 4.50V
V_{OL}	Output LOW Voltage		0.3	0.5	V	I_{OL} = 24 mA, V_{TTL} = 4.50V
V_{IH}	Input HIGH Voltage	−1170		−870	mV	Guaranteed HIGH Signal for All Inputs
V_{IL}	Input LOW Voltage	−1830		−1480	mV	Guaranteed LOW Signal for All Inputs
V_{DIFF}	Input Voltage Differential	150			mV	Required for Full Output Swing
V_{CM}	Common Mode Voltage	GNDECL − 2.0		GNDECL − 0.5	V	
I_{IH}	Input HIGH Current			35	µA	$V_{IN} = V_{IH(Max)}$
I_{IL}	Input LOW Current	0.50			µA	$V_{IN} = V_{IH(Min)}$
I_{OZHT}	3-STATE Current Output High			70	µA	V_{OUT} = +2.7V
I_{OZLT}	3-STATE Current Output Low	−650			µA	V_{OUT} = +0.5V
I_{OS}	Output Short-Circuit Current	−100		−225	mA	V_{OUT} = 0.0V, V_{TTL} = +5.5V
I_{CEX}	Output HIGH Leakage Current			50	µA	V_{OUT} = 5.5V
I_{ZZ}	Bus Drainage Test			500	µA	V_{OUT} = 5.25V
I_{TTL}	V_{TTL} Supply Current			39	mA	TTL Outputs LOW
				27	mA	TTL Outputs HIGH
				39	mA	TTL Outputs in 3-STATE

Note 12: The specified limits represent the "worst case" value for the parameter. Since these values normally occur at the temperature extremes, additional noise immunity and guardbanding can be achieved by decreasing the allowable system operating ranges. Conditions for testing shown in the tables are chosen to guarantee operation under "worst case" conditions.

PCC TTL-to-ECL AC Electrical Characteristics

V_{EE} = −4.2V to −5.7V, V_{TTL} = +4.5V to +5.5V

Symbol	Parameter	T_C = −40°C		T_C = +25°C		T_C = +85°C		Units	Conditions
		Min	Max	Min	Max	Min	Max		
f_{MAX}	Toggle Frequency	180		180		180		MHz	
t_{PLH} t_{PHL}	T_n to E_n, $\overline{E}_n$ (Transparent)	0.90	2.40	0.80	2.20	0.70	2.50	ns	Figures 1, 3
t_{PLH} t_{PHL}	LE to E_n, $\overline{E}_n$	1.30	2.70	1.50	2.70	1.80	3.10	ns	Figures 1, 3
t_{PZH}	OE to E_n, $\overline{E}_n$ (Cutoff to HIGH)	2.90	9.00	2.80	6.90	2.80	5.80	ns	Figures 1, 3
t_{PHZ}	OE to E_n, $\overline{E}_n$ (HIGH to Cutoff)	1.10	2.70	1.40	2.90	1.70	3.40	ns	Figures 1, 3
t_{PHZ}	DIR to E_n, $\overline{E}_n$ (HIGH to Cutoff)	1.10	2.70	1.40	2.90	1.80	3.50	ns	Figures 1, 3
t_S	T_n to LE	0.70		0.70		0.70		ns	Figures 1, 3
t_H	T_n to LE	0.90		0.90		0.90		ns	Figures 1, 3
t_{TLH} t_{THL}	Transition Time 20% to 80%, 80% to 20%	0.45	2.20	0.45	1.50	0.45	1.50	ns	Figures 1, 3

Industrial Version (Continued)
PCC ECL-to-TTL AC Electrical Characteristics

V_{EE} = −4.2V to −5.7V, V_{TTL} = +4.5V to +5.5V, C_L = 50 pF

Symbol	Parameter	T_C = −40°C		T_C = +25°C		T_C = +85°C		Units	Conditions
		Min	Max	Min	Max	Min	Max		
f_{MAX}	Toggle Frequency	75		75		75		MHz	
t_{PLH} t_{PHL}	E_n, $\overline{E}_n$ to T_n (Transparent)	1.70	4.90	1.70	5.10	1.80	5.80	ns	Figures 2, 4
t_{PLH} t_{PHL}	LE to T_n	2.30 3.30	4.80 5.50	2.40 3.50	4.70 5.70	2.60 4.00	4.90 6.70	ns	Figures 2, 4
t_{PZH} t_{PZL}	OE to T_n (Enable Time)	2.30 4.10	5.50 8.20	2.10 4.10	4.70 7.80	2.00 4.20	4.30 7.80	ns	Figures 2, 5
t_{PHZ} t_{PLZ}	OE to T_n (Disable Time)	3.20 4.00	7.90 7.40	3.30 4.30	7.50 7.80	3.70 5.30	7.90 9.40	ns	Figures 2, 5
t_{PHZ} t_{PLZ}	DIR to T_n (Disable Time)	2.00 2.10	6.60 4.70	1.90 2.00	5.70 3.70	1.70 1.90	5.20 3.70	ns	Figures 2, 6
t_S	E_n, $\overline{E}_n$ to LE	0.50		0.50		0.50		ns	Figures 2, 4
t_H	E_n, $\overline{E}_n$ to LE	1.00		1.00		1.00		ns	Figures 2, 4

Test Circuitry

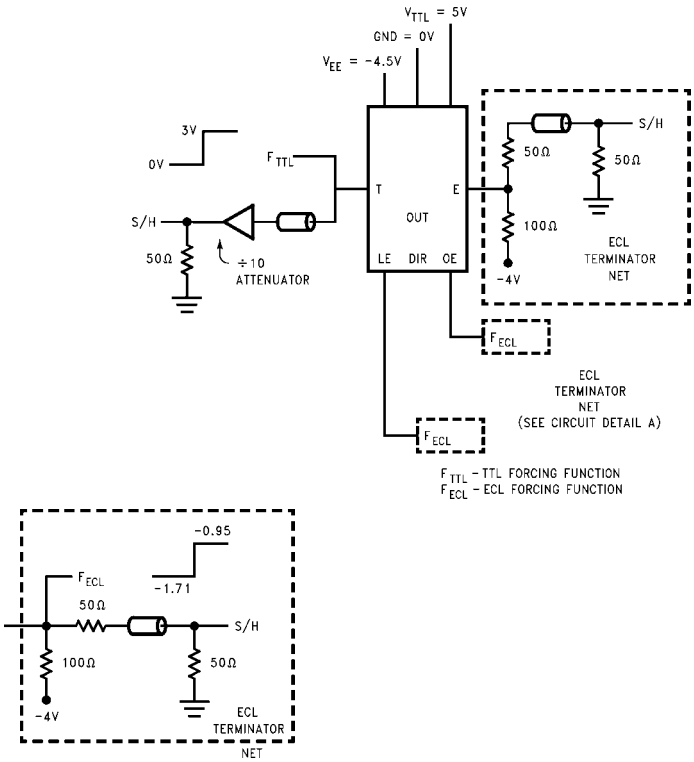

FIGURE 1. TTL-to-ECL AC Test Circuit

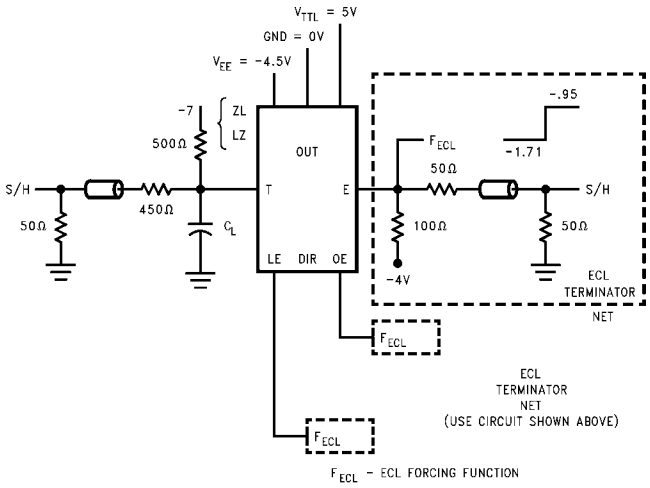

C_L = 50 pF including stray and jig capacitance.

Note: 50Ω to ground termination **must be included** on ECL I/O pins **not** monitored by a 50Ω scope to prevent oscillatory feedback.

FIGURE 2. ECL-to-TTL AC Test Circuit

Switching Waveforms

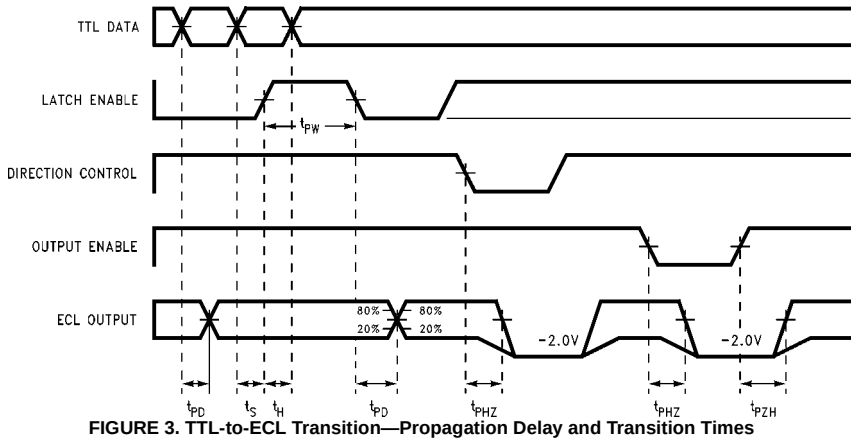

FIGURE 3. TTL-to-ECL Transition—Propagation Delay and Transition Times

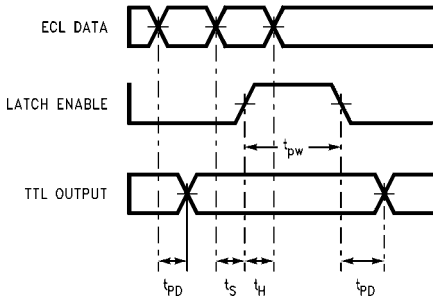

Note: DIR is LOW, and OE is HIGH

FIGURE 4. ECL-to-TTL Transition—Propagation Delay and Transition Times

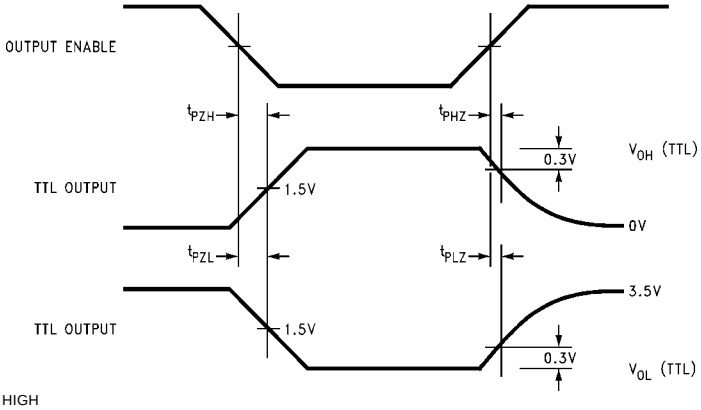

Note: DIR is LOW, LE is HIGH

FIGURE 5. ECL-to-TTL Transition, OE to TTL Output, Enable and Disable Times

Switching Waveforms (Continued)

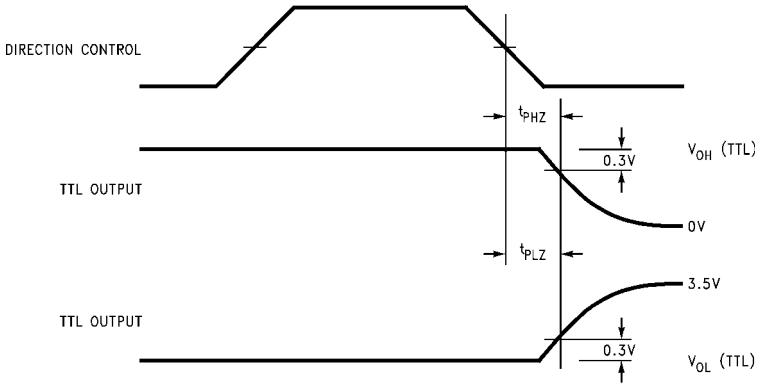

Note: OE is HIGH, LE is HIGH

FIGURE 6. ECL-to-TTL Transition, DIR to TTL Output, Disable Time

Applications

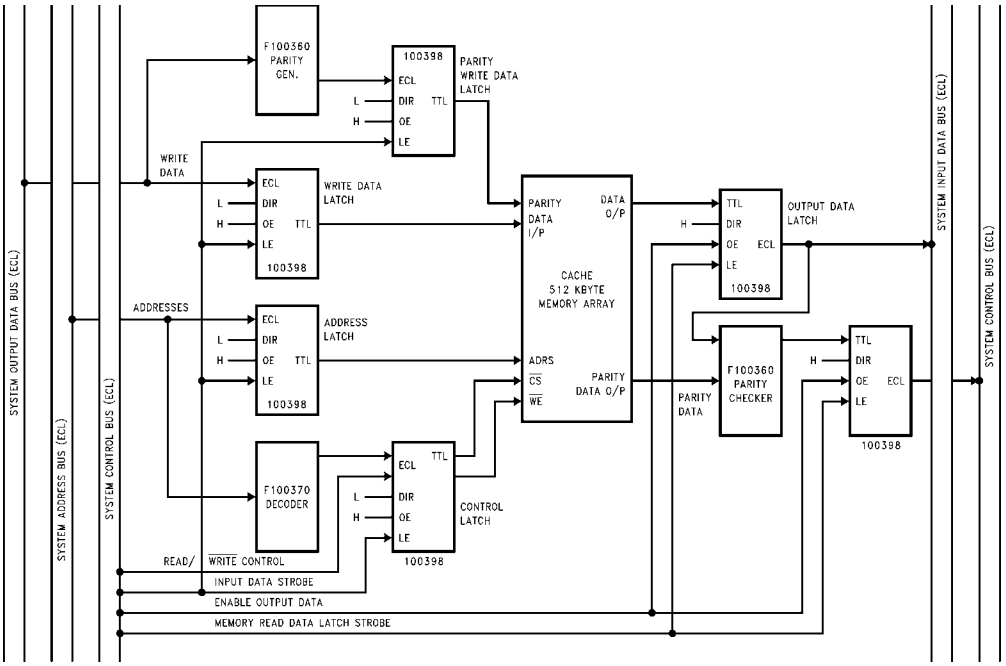

FIGURE 7. Applications Diagram—MOS/TTL SRAM Interface Using 100398 ECL–TTL Latched Translator

Physical Dimensions inches (millimeters) unless otherwise noted

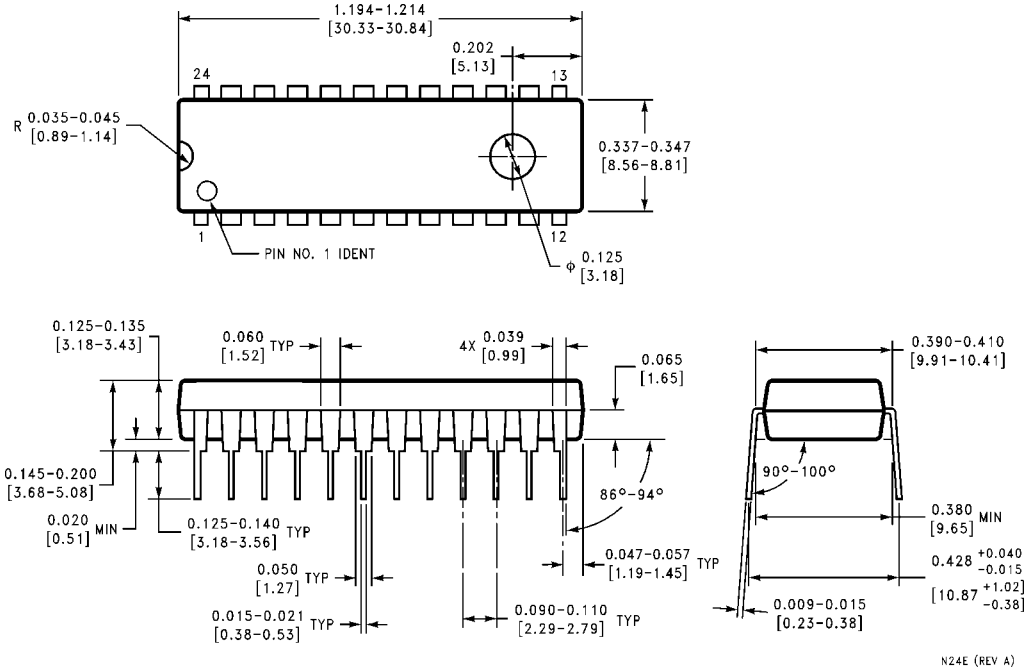

24-Lead Plastic Dual-In-Line Package (PDIP), JEDEC MS-010, 0.400 Wide
Package Number N24E

Physical Dimensions inches (millimeters) unless otherwise noted (Continued)

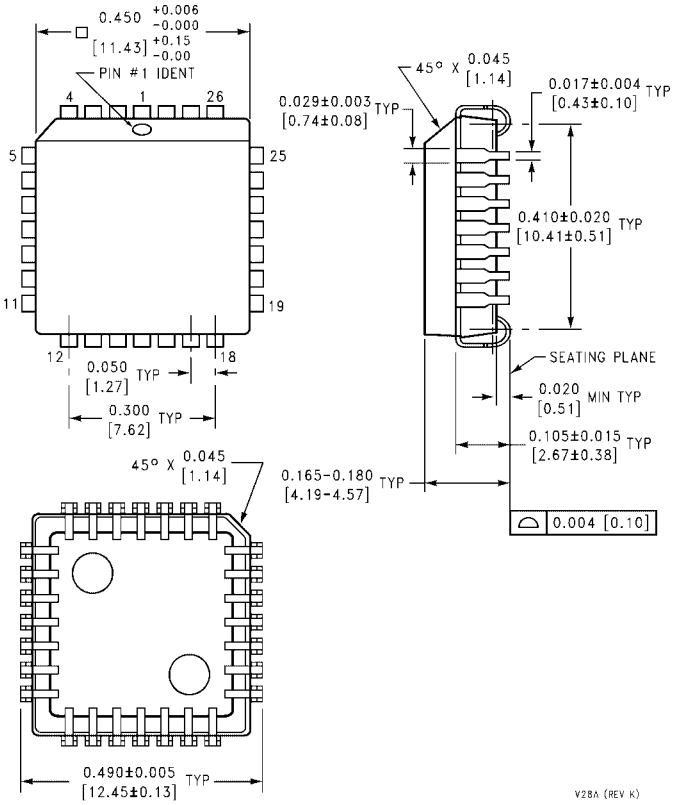

28-Lead Plastic Lead Chip Carrier (PLCC), JEDEC MO-047, 0.450 Square
Package Number V28A

Fairchild does not assume any responsibility for use of any circuitry described, no circuit patent licenses are implied and Fairchild reserves the right at any time without notice to change said circuitry and specifications.

LIFE SUPPORT POLICY

FAIRCHILD'S PRODUCTS ARE NOT AUTHORIZED FOR USE AS CRITICAL COMPONENTS IN LIFE SUPPORT DEVICES OR SYSTEMS WITHOUT THE EXPRESS WRITTEN APPROVAL OF THE PRESIDENT OF FAIRCHILD SEMICONDUCTOR CORPORATION. As used herein:

1. Life support devices or systems are devices or systems which, (a) are intended for surgical implant into the body, or (b) support or sustain life, and (c) whose failure to perform when properly used in accordance with instructions for use provided in the labeling, can be reasonably expected to result in a significant injury to the user.
2. A critical component in any component of a life support device or system whose failure to perform can be reasonably expected to cause the failure of the life support device or system, or to affect its safety or effectiveness.

www.fairchildsemi.com

This datasheet has been downloaded from:

www.DatasheetCatalog.com

Datasheets for electronic components.

Littlediode supplies new, hard to find or obsolete electronic components and semiconductors all over the world.

With over two million different components listed you are sure to find the part you need.

Feel free to visit us today at our online store:

LittleDiode.com

Looking forward to providing you with the best possible service.