HCF4050B

HEX BUFFER/CONVERTER (NON INVERTING)

- PROPAGATION DELAY TIME : t_{PD} = 40ns (TYP.) at V_{DD} = 10V C_L = 50pF
- HIGH TO LOW LEVEL LOGIC CONVERSION
- HIGH "SINK" AND "SOURCE" CURRENT CAPABILITY
- QUIESCENT CURRENT SPECIFIED UP TO 20V
- 5V, 10V AND 15V PARAMETRIC RATINGS
- INPUT LEAKAGE CURRENT I_I = 100nA (MAX) AT V_{DD} = 18V T_A = 25°C
- 100% TESTED FOR QUIESCENT CURRENT
- MEETS ALL REQUIREMENTS OF JEDEC JESD13B " STANDARD SPECIFICATIONS FOR DESCRIPTION OF B SERIES CMOS DEVICES"

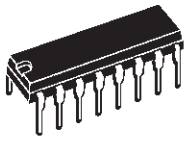

DIP

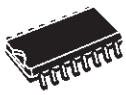

SOP

ORDER CODES

PACKAGE	TUBE	T & R
DIP	HCF4050BEY	
SOP	HCF4050BM1	HCF4050M013TR

DESCRIPTION

The HCF4050B is a monolithic integrated circuit fabricated in Metal Oxide Semiconductor technology available in DIP and SOP packages.
It is an non inverting Hex Buffer/Converter and feature logic level conversions using only one supply voltage (V_{DD}).

The input high level signal (V_{IH}) can exceed the V_{DD} supply voltage when these devices are used for logic level conversions. This device is intended for use as CMOS to DTL/TTL converters and can drive directly two DTL/TTL loads (V_{DD}=5V, V_{OL}≤0.4V and I_{OL}≤3.2mA.

PIN CONNECTION

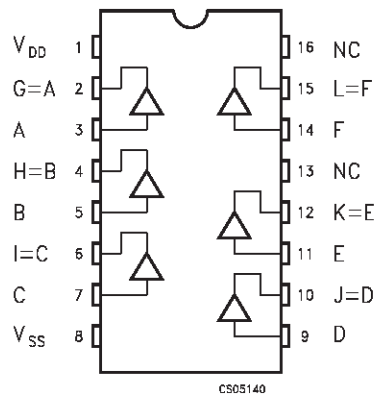

INPUT EQUIVALENT CIRCUIT

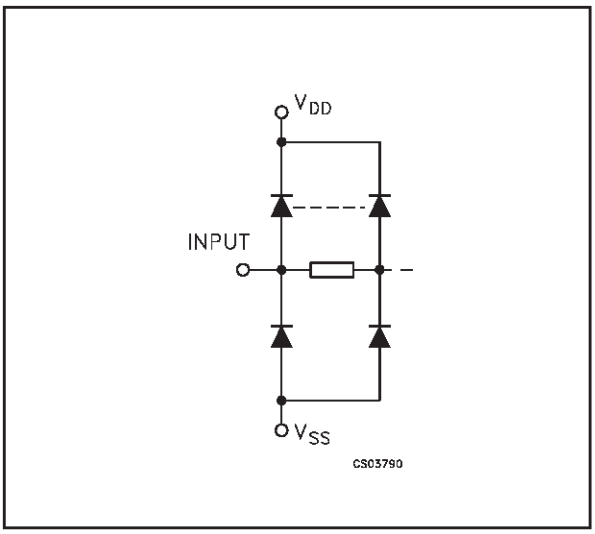

PIN DESCRIPTION

PIN No	SYMBOL	NAME AND FUNCTION
3, 5, 7, 9, 11, 14	A, B, C, D, E, F	Data Inputs
2, 4, 6, 10, 12, 15	G, H, I, J, K, L	Data Outputs
13 , 16	NC	Not Connected
8	V_{SS}	Negative Supply Voltage
1	V_{DD}	Positive Supply Voltage

TRUTH TABLE

INPUTS	OUTPUTS
A, B, C, D,E, F	**G, H, I, J, K, L**
L	L
H	H

ABSOLUTE MAXIMUM RATINGS

Symbol	Parameter	Value	Unit
V_{DD}	Supply Voltage	-0.5 to +22	V
V_I	DC Input Voltage	-0.5 to V_{DD} + 0.5	V
I_I	DC Input Current	± 10	mA
P_D	Power Dissipation per Package	200	mW
	Power Dissipation per Output Transistor	100	mW
T_{op}	Operating Temperature	-55 to +125	°C
T_{stg}	Storage Temperature	-65 to +150	°C

Absolute Maximum Ratings are those values beyond which damage to the device may occur. Functional operation under these conditions is not implied.
All voltage values are referred to V_{SS} pin voltage.

RECOMMENDED OPERATING CONDITIONS

Symbol	Parameter	Value	Unit
V_{DD}	Supply Voltage	3 to 20	V
V_I	Input Voltage	0 to V_{DD}	V
T_{op}	Operating Temperature	-55 to 125	°C

DC SPECIFICATIONS

Symbol	Parameter	Test Condition				Value							Unit
		V_I (V)	V_O (V)	$\|I_O\|$ (μA)	V_{DD} (V)	T_A = 25°C			-40 to 85°C		-55 to 125°C		
						Min.	Typ.	Max.	Min.	Max.	Min.	Max.	
I_L	Quiescent Current	0/5			5		0.02	1		30		30	μA
		0/10			10		0.02	2		60		60	
		0/15			15		0.02	4		120		120	
		0/20			20		0.04	20		600		600	
V_{OH}	High Level Output Voltage	0/5		<1	5	4.95			4.95		4.95		V
		0/10		<1	10	9.95			9.95		9.95		
		0/15		<1	15	14.95			14.95		14.95		
V_{OL}	Low Level Output Voltage	5/0		<1	5		0.05			0.05		0.05	V
		10/0		<1	10		0.05			0.05		0.05	
		15/0		<1	15		0.05			0.05		0.05	
V_{IH}	High Level Input Voltage		0.5/4.5	<1	5	3.5			3.5		3.5		V
			1/9	<1	10	7			7		7		
			1.5/13.5	<1	15	11			11		11		
V_{IL}	Low Level Input Voltage		4.5/0.5	<1	5			1.5		1.5		1.5	V
			9/1	<1	10			3		3		3	
			13.5/1.5	<1	15			4		4		4	
I_{OH}	Output Drive Current	0/5	2.5	<1	5	-1.25	-6.4		-0.42		-0.42		mA
		0/5	4.6	<1	5	-0.51	-1.6		-0.38		-0.38		
		0/10	9.5	<1	10	-1.25	-3.6		-1		-1		
		0/15	13.5	<1	15	-3.75	-12		-3		-3		
I_{OL}	Output Sink Current	0/5	0.4	<1	5	3.2	6.4		2.6		2.6		mA
		0/10	0.5	<1	10	8	16		6.6		6.6		
		0/15	1.5	<1	15	24	48		19		19		
I_I	Input Leakage Current	0/18	Any Input		18		$\pm 10^{-5}$	±0.1		±1		±1	μA
C_I	Input Capacitance		Any Input				5	7.5					pF

The Noise Margin for both "1" and "0" level is: 1V min. with V_{DD}=5V, 2V min. with V_{DD}=10V, 2.5V min. with V_{DD}=15V

DYNAMIC ELECTRICAL CHARACTERISTICS (T_{amb} = 25°C, C_L = 50pF, R_L = 200KΩ, $t_r = t_f$ = 20 ns)

Symbol	Parameter	Test Condition			Value (*)			Unit
		V_{DD} (V)	V_I (V)		Min.	Typ.	Max.	
t_{TLH}	Output Transition Time	5	5			80	160	ns
		10	10			40	80	
		15	15			30	60	
t_{THL}	Output Transition Time	5	5			30	60	ns
		10	10			20	40	
		15	15			15	30	
t_{PLH}	Propagation Delay Time	5	5			70	140	ns
		10	10			40	80	
		5	10			45	90	
		15	15			30	60	
		5	15			40	80	
t_{PHL}	Propagation Delay Time	5	5			55	110	ns
		10	10			22	55	
		5	10			50	100	
		15	15			15	30	
		5	15			50	100	

(*) Typical temperature coefficient for all V_{DD} value is 0.3 %/°C.

TEST CIRCUIT

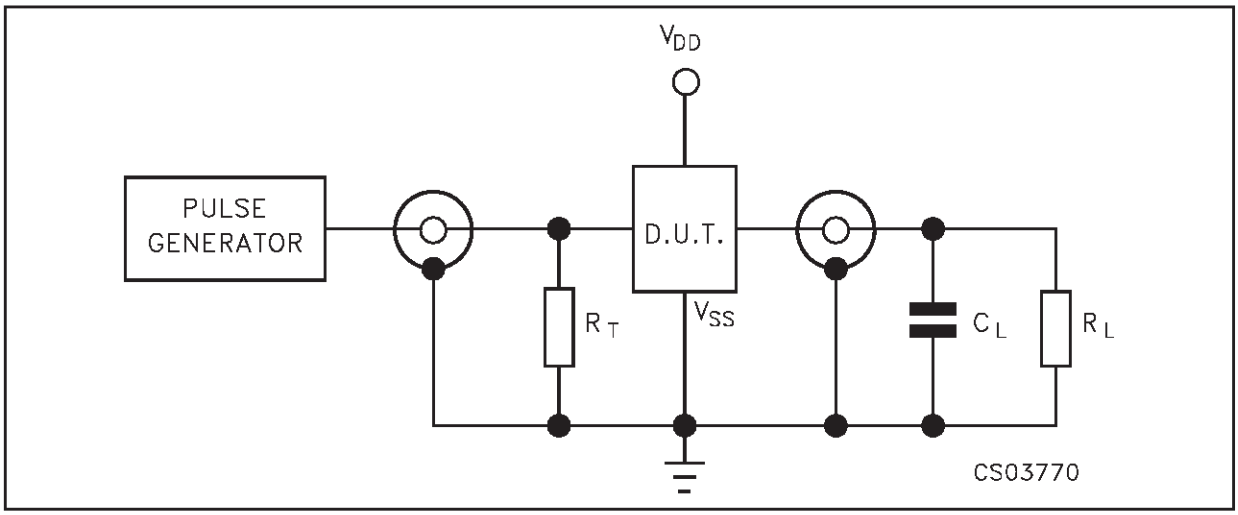

C_L = 50pF or equivalent (includes jig and probe capacitance)
R_L = 200KΩ
$R_T = Z_{OUT}$ of pulse generator (typically 50Ω)

WAVEFORM : PROPAGATION DELAY TIMES (f=1MHz; 50% duty cycle)

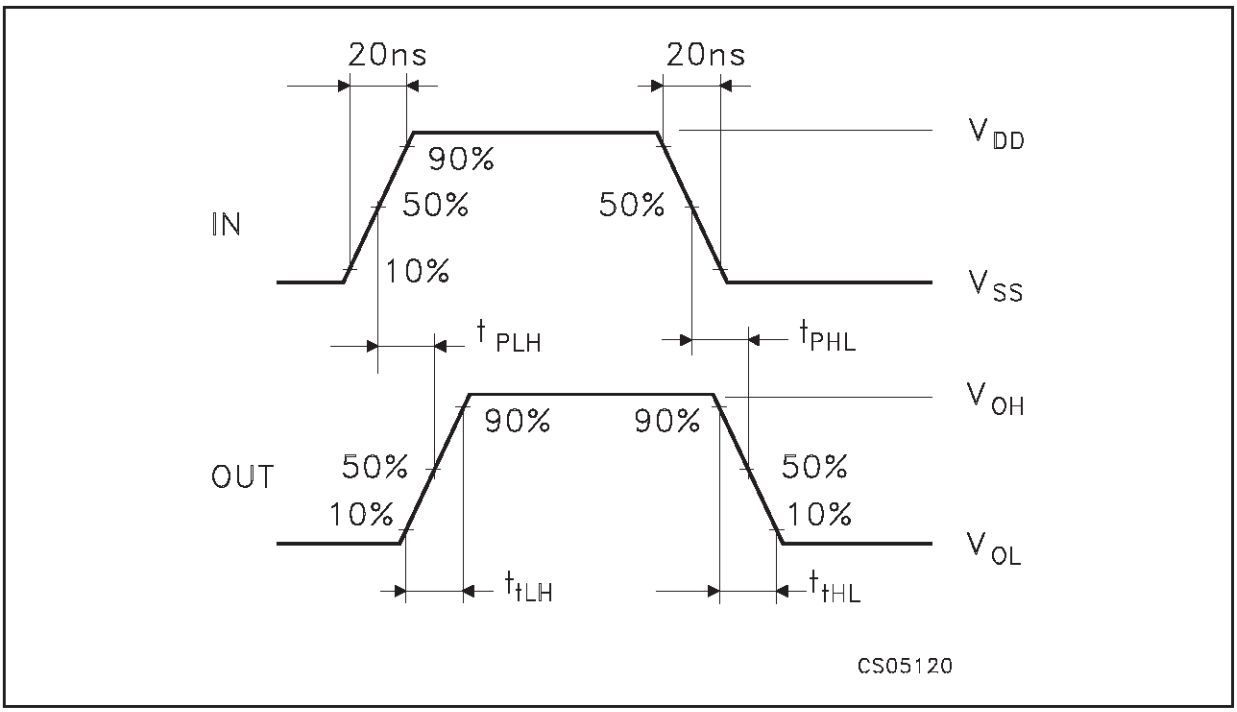

Plastic DIP-16 (0.25) MECHANICAL DATA

DIM.	mm.			inch		
	MIN.	TYP	MAX.	MIN.	TYP.	MAX.
a1	0.51			0.020		
B	0.77		1.65	0.030		0.065
b		0.5			0.020	
b1		0.25			0.010	
D			20			0.787
E		8.5			0.335	
e		2.54			0.100	
e3		17.78			0.700	
F			7.1			0.280
I			5.1			0.201
L		3.3			0.130	
Z			1.27			0.050

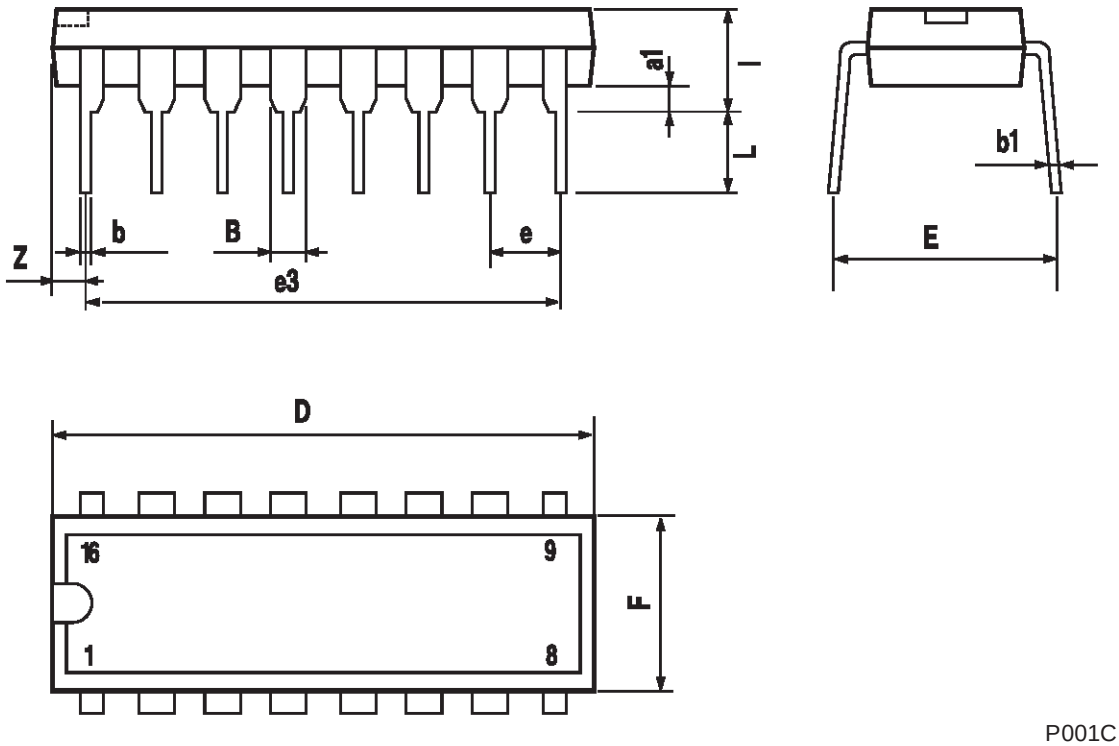

P001C

SO-16 MECHANICAL DATA

DIM.	mm.			inch		
	MIN.	TYP	MAX.	MIN.	TYP.	MAX.
A			1.75			0.068
a1	0.1		0.2	0.003		0.007
a2			1.65			0.064
b	0.35		0.46	0.013		0.018
b1	0.19		0.25	0.007		0.010
C		0.5			0.019	
c1	45° (typ.)					
D	9.8		10	0.385		0.393
E	5.8		6.2	0.228		0.244
e		1.27			0.050	
e3		8.89			0.350	
F	3.8		4.0	0.149		0.157
G	4.6		5.3	0.181		0.208
L	0.5		1.27	0.019		0.050
M			0.62			0.024
S	8° (max.)					

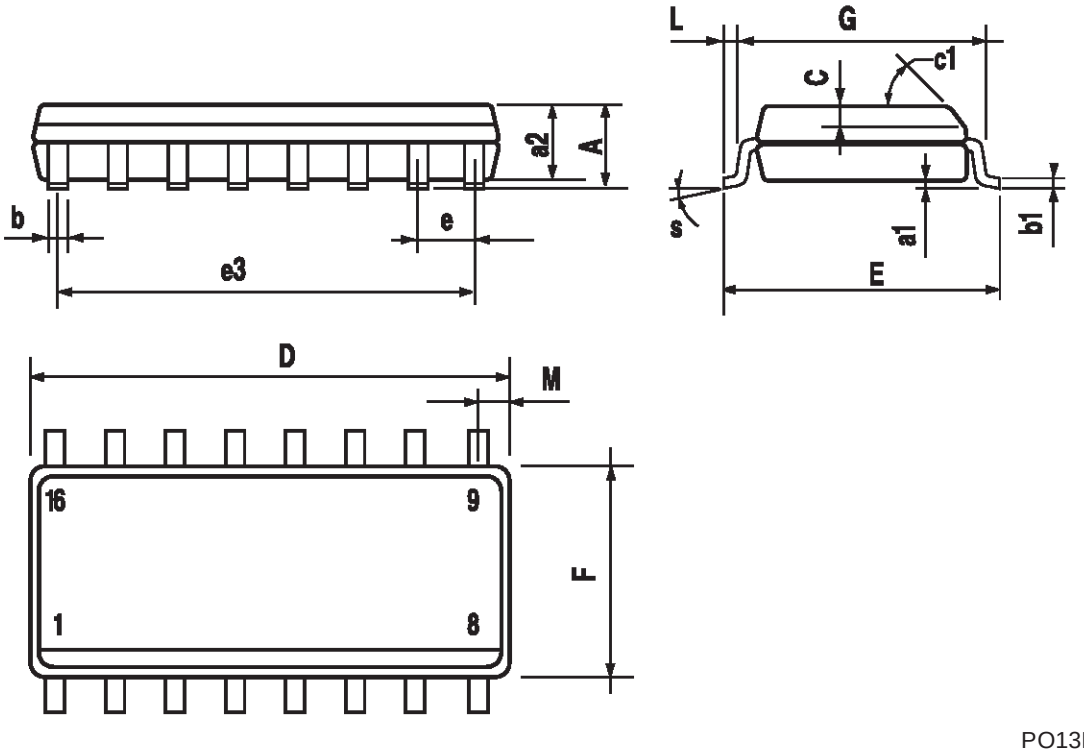

PO13H

Information furnished is believed to be accurate and reliable. However, STMicroelectronics assumes no responsibility for the consequences of use of such information nor for any infringement of patents or other rights of third parties which may result from its use. No license is granted by implication or otherwise under any patent or patent rights of STMicroelectronics. Specifications mentioned in this publication are subject to change without notice. This publication supersedes and replaces all information previously supplied. STMicroelectronics products are not authorized for use as critical components in life support devices or systems without express written approval of STMicroelectronics.

© The ST logo is a registered trademark of STMicroelectronics

© 2001 STMicroelectronics - Printed in Italy - All Rights Reserved
STMicroelectronics GROUP OF COMPANIES
Australia - Brazil - China - Finland - France - Germany - Hong Kong - India - Italy - Japan - Malaysia - Malta - Morocco
Singapore - Spain - Sweden - Switzerland - United Kingdom
© **http://www.st.com**

littlediode
COMPONENTS FOR ALL

Littlediode supplies new, hard to find or obsolete electronic components and semiconductors all over the world.

With over two million different components listed you are sure to find the part you need.

Feel free to visit us today at our online store:

LittleDiode.com

Looking forward to providing you with the best possible service.