FAIRCHILD SEMICONDUCTOR®

January 2003

FDG6318PZ

Dual P-Channel, Digital FET

General Description

These dual P-Channel logic level enhancement mode MOSFET are produced using Fairchild Semiconductor's especially tailored to minimize on-state resistance. This device has been designed especially for bipolar digital transistors and small signal MOSFETS

Applications

- Battery management

Features

- -0.5A, -20V. $r_{DS(ON)}$ = 780mΩ (Max)@ V_{GS} = -4.5 V
  $r_{DS(ON)}$ = 1200mΩ (Max) @ V_{GS} = -2.5 V
- Very low level gate drive requirements allowing direct operation in 3V circuits ($V_{GS(TH)}$ < 1.5V).
- Gate-Source Zener for ESD ruggedness (>1.4kV Human Body Model).
- Compact industry standard SC-70-6 surface mount package.

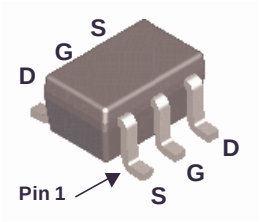

SC70-6

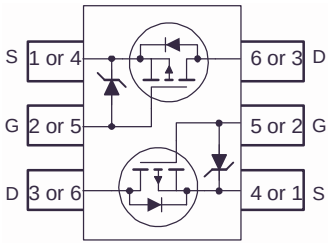

The pinouts are symmetrical; pin1 and pin 4 are interchangeable.

MOSFET Maximum Ratings T_A=25°C unless otherwise noted

Symbol	Parameter	Ratings	Units
V_{DSS}	Drain to Source Voltage	-20	V
V_{GS}	Gate to Source Voltage	±12	V
I_D	Drain Current		
	Continuous (T_C = 25°C, V_{GS} = - 4.5V)	-0.5	A
	Continuous (T_C = 100°C, V_{GS} = - 2.5V)	-0.3	A
	Pulsed	Figure 4	
P_D	Power dissipation	0.3	W
	Derate above 25°C	2.4	mW/°C
T_J, T_{STG}	Operating and Storage Temperature	-55 to 150	°C
ESD	Electrostatic Discharge Rating MIL-STD-883D Human Body Model (100pF / 1500Ω)	1.4	kV

Thermal Characteristics

$R_{\theta JA}$	Thermal Resistance Junction to Ambient (Note 1)	415	°C/W

Package Marking and Ordering Information

Device Marking	Device	Package	Reel Size	Tape Width	Quantity
.68	FDG6318PZ	SC70-6	7"	8 mm	3000

©2003 Fairchild Semiconductor Corporation

Electrical Characteristics T_A = 25°C unless otherwise noted

Symbol	Parameter	Test Conditions	Min	Typ	Max	Units
Off Characteristics						
B_{VDSS}	Drain to Source Breakdown Voltage	I_D = -250μA, V_{GS} = 0V	-20	-	-	V
I_{DSS}	Zero Gate Voltage Drain Current	V_{GS} = -16V, V_{GS} = 0V	-	-	-3	μA
I_{GSS}	Gate to Source Leakage Current	V_{GS} = ±12V , V_{GS} = 0V	-	-	±10	μA
On Characteristics						
$V_{GS(TH)}$	Gate to Source Threshold Voltage	V_{GS} = V_{DS}, I_D = -250μA	-0.65	-0.9	-1.5	V
$r_{DS(ON)}$	Drain to Source On Resistance	I_D = -0.5A, V_{GS} = -4.5V	-	580	780	mΩ
		I_D = -0.4A, V_{GS} = -2.5V	-	910	1200	
Dynamic Characteristics						
C_{ISS}	Input Capacitance	V_{DS} = -10V, V_{GS} = 0V, f = 1MHz	-	85.4	-	pF
C_{OSS}	Output Capacitance		-	24.9	-	pF
C_{RSS}	Reverse Transfer Capacitance		-	8.83	-	pF
$Q_{g(TOT)}$	Total Gate Charge at -4.5V	V_{GS} = 0V to -4.5V; V_{DD} = -10V, I_D = -0.5A, I_g = 1.0mA	-	1.08	1.62	nC
$Q_{g(-2.5)}$	Total Gate Charge at -2.5V	V_{GS} = 0V to -2.5V	-	0.67	1.0	nC
Q_{gs}	Gate to Source Gate Charge		-	0.21	-	nC
Q_{gd}	Gate to Drain "Miller" Charge		-	0.33	-	nC
Switching Characteristics (V_{GS} = -4.5V)						
t_{ON}	Turn-On Time	V_{DD} = -10V, I_D = -0.5A, V_{GS} = -4.5V, R_{GS} = 120Ω	-	-	35	ns
$t_{d(ON)}$	Turn-On Delay Time		-	10	-	ns
t_r	Rise Time		-	13	-	ns
$t_{d(OFF)}$	Turn-Off Delay Time		-	40	-	ns
t_f	Fall Time		-	24	-	ns
t_{OFF}	Turn-Off Time		-	-	96	ns
Drain-Source Diode Characteristics						
V_{SD}	Source to Drain Diode Voltage	I_{SD} = -0.5A	-	-0.9	-1.2	V
t_{rr}	Reverse Recovery Time	I_{SD} = -0.5A, dI_{SD}/dt = 100A/μs	-	-	22	ns
Q_{RR}	Reverse Recovered Charge	I_{SD} = -0.5A, dI_{SD}/dt = 100A/μs	-	-	16	nC

Notes:

1. $R_{\theta JA}$ is the sum of the junction-to-case and case-to-ambient thermal resistance where the case thermal reference is defined as the solder mounting surface of the center drain pad. $R_{\theta JC}$ is guaranteed by design while $R_{\theta CA}$ is determined by user's board design. $R_{\theta JA}$ = 415 °C/W when mounted on a 1inch^2 copper pad.

©2003 Fairchild Semiconductor Corporation

Typical Characteristic T_A = 25°C unless otherwise noted

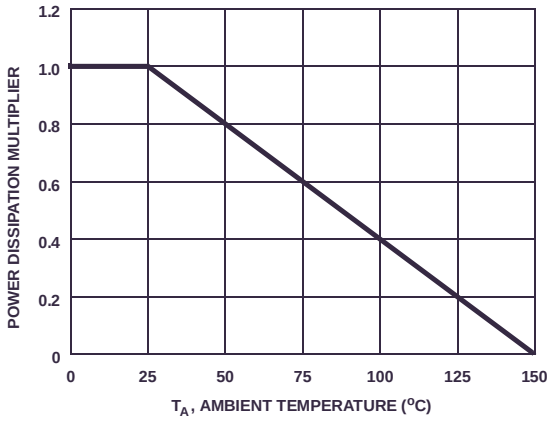

Figure 1. Normalized Power Dissipation vs Ambient Temperature

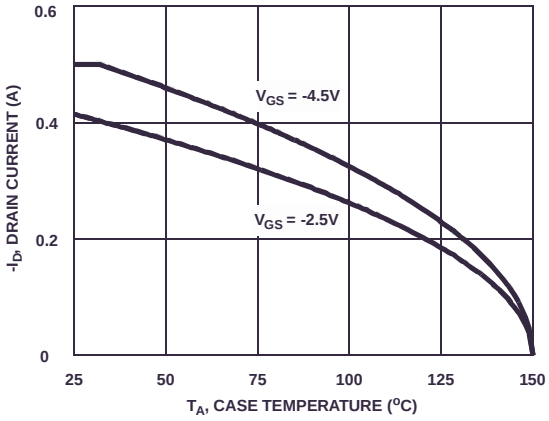

Figure 2. Maximum Continuous Drain Current vs Case Temperature

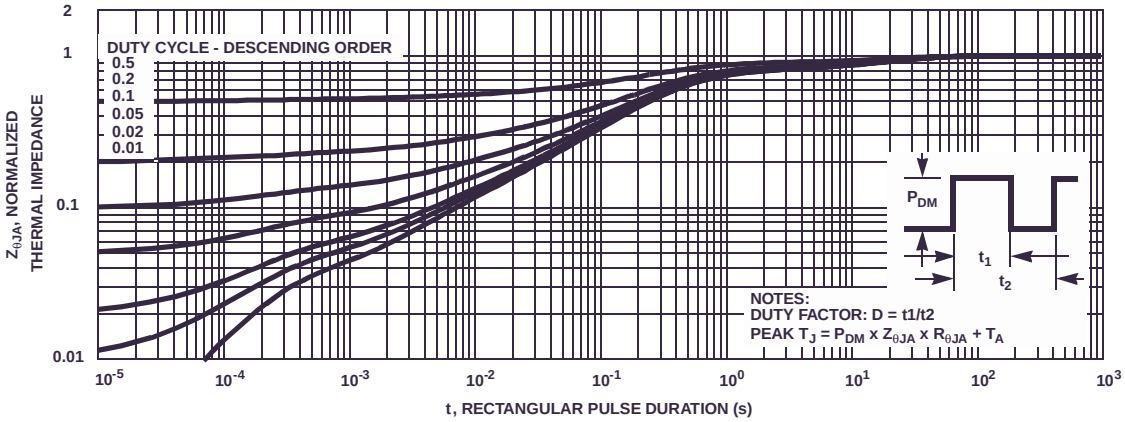

Figure 3. Normalized Maximum Transient Thermal Impedance

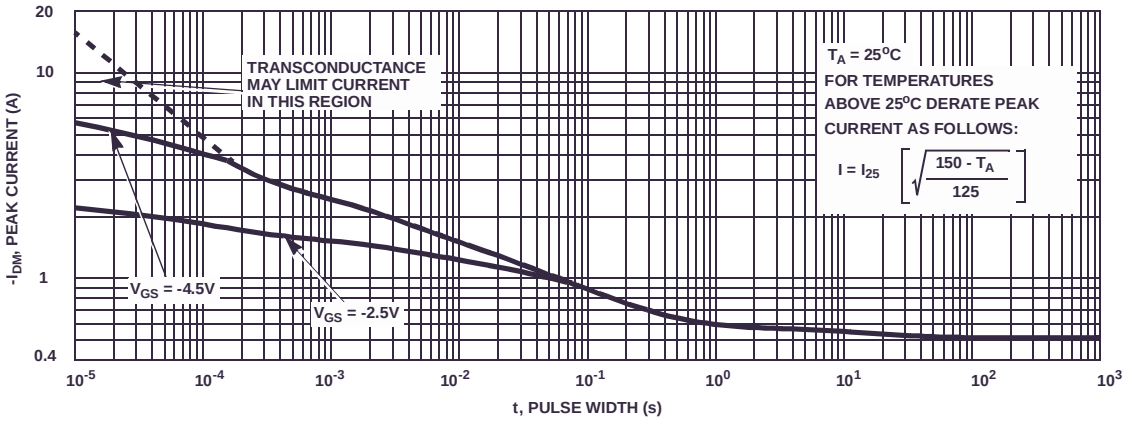

Figure 4. Peak Current Capability

©2003 Fairchild Semiconductor Corporation

Typical Characteristic (Continued) T_A = 25°C unless otherwise noted

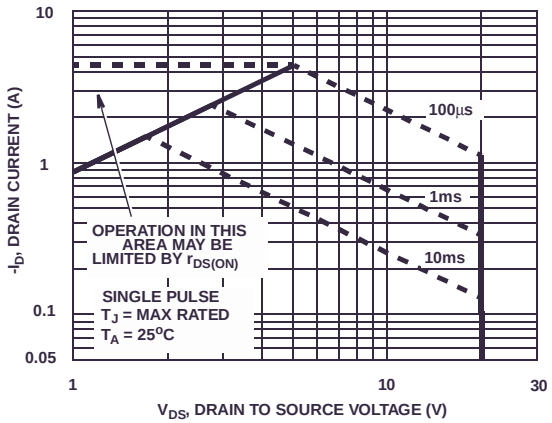

Figure 5. Forward Bias Safe Operating Area

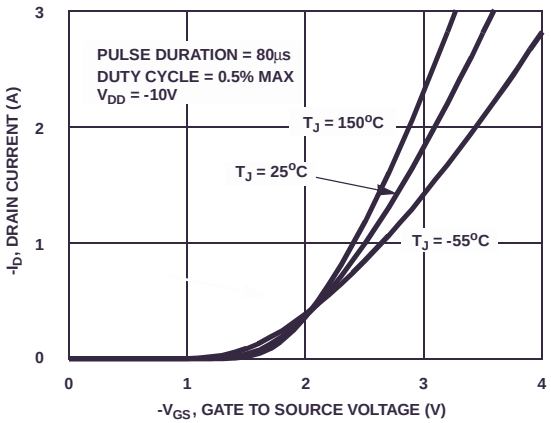

Figure 6. Transfer Characteristics

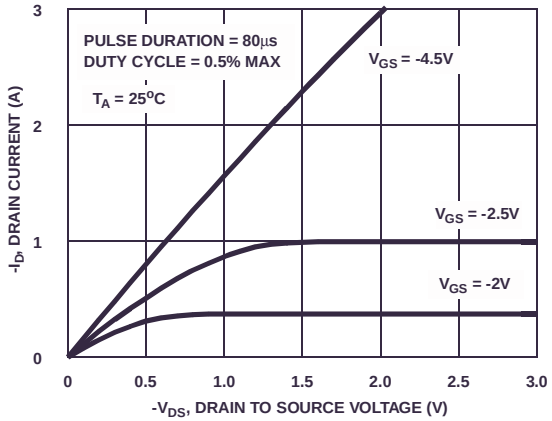

Figure 7. Saturation Characteristics

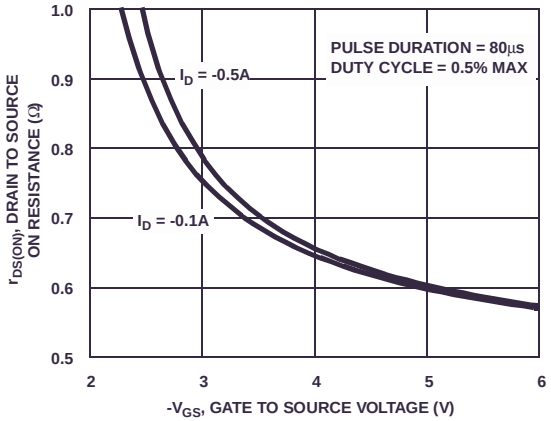

Figure 8. Drain to Source On Resistance vs Gate Voltage and Drain Current

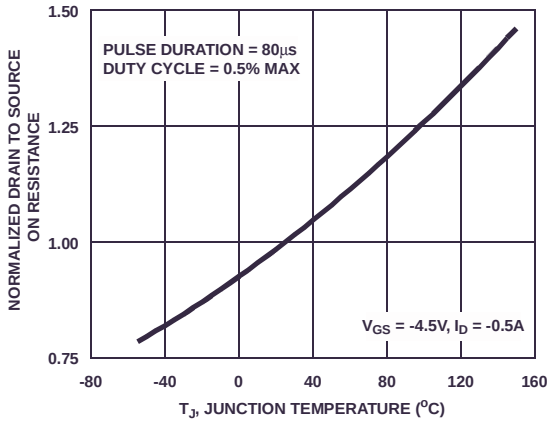

Figure 9. Normalized Drain to Source On Resistance vs Junction Temperature

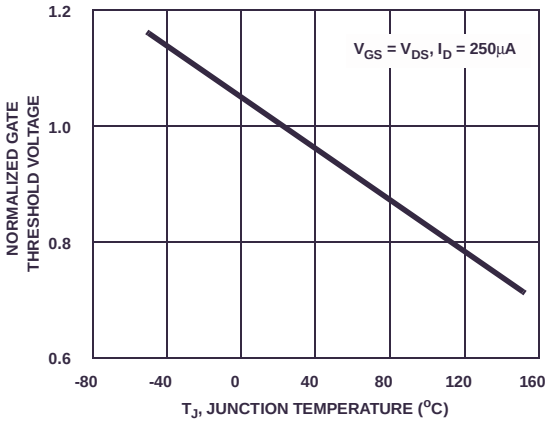

Figure 10. Normalized Gate Threshold Voltage vs Junction Temperature

©2003 Fairchild Semiconductor Corporation

Typical Characteristic (Continued) T_A = 25°C unless otherwise noted

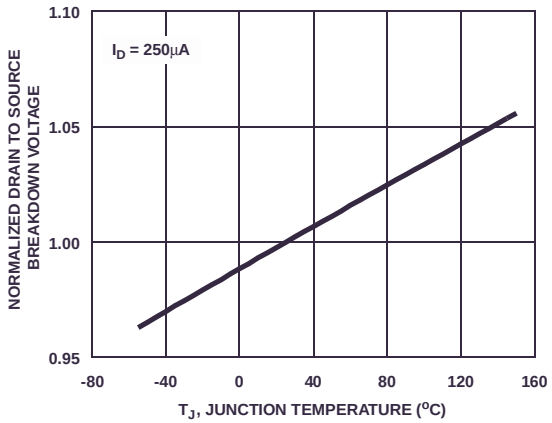

Figure 11. Normalized Drain to Source Breakdown Voltage vs Junction Temperature

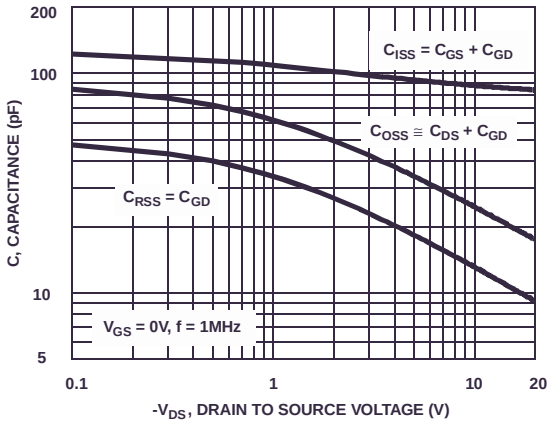

Figure 12. Capacitance vs Drain to Source Voltage

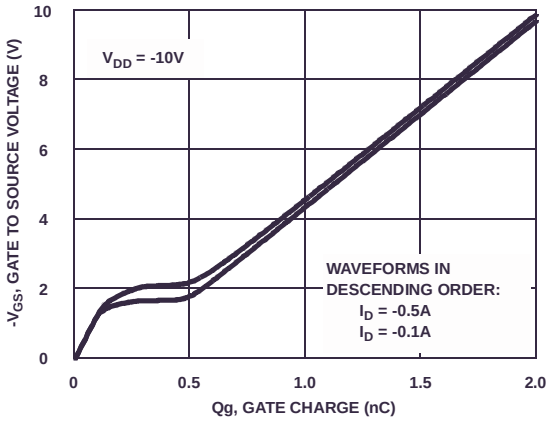

Figure 13. Gate Charge Waveforms for Constant Gate Currents

©2003 Fairchild Semiconductor Corporation

PSPICE Electrical Model

```
.SUBCKT FDG6318PZ  2 1 3 ;       rev January 2003
CA  12  8 0.6e-10
CB  15  14 1.1e-10
CIN  6  8  0.75e-10

DBODY 5 7 DBODYMOD
DBREAK 7 11  DBREAKMOD
DPLCAP 10 6 DPLCAPMOD

EBREAK 5 11 17  18 -23.3
EDS  14  8  5  8 1
EGS  13  8  6  8 1
ESG 5 10 8 6 1
EVTHRES 6 21 19 8  1
EVTEMP 6 20 18 22 1

IT  8  17  1

LDRAIN 2 5 1e-9
LGATE 1  9 0.47e-9
LSOURCE  3  7 0.47e-9

MMED 16 6 8 8 MMEDMOD
MSTRO 16 6 8 8 MSTROMOD
MWEAK 16 21 8 8 MWEAKMOD

RBREAK  17  18  RBREAKMOD  1
RDRAIN 50 16 RDRAINMOD 280e-3
RGATE  9  20 12.4
RLDRAIN 2 5 10
RLGATE 1 9 4.7
RLSOURCE 3 7 4.7
RSLC1 5 51 RSLCMOD 1e-6
RSLC2 5 50 1e3
RSOURCE  8  7  RSOURCEMOD 190e-3
RVTHRES 22 8 RVTHRESMOD  1
RVTEMP 18 19 RVTEMPMOD 1

S1A  6  12  13  8  S1AMOD
S1B  13  12  13  8  S1BMOD
S2A  6  15  14  13  S2AMOD
S2B  13  15  14  13  S2BMOD

VBAT 22 19  DC  1

ESLC 51 50 VALUE={(V(5,51)/ABS(V(5,51)))*(PWR(V(5,51)/(1e-6*20),2.5))}

.MODEL DBODYMOD D (IS = 7.7e-11 N=1.277  RS = 1e-3  TRS1 = 2.8e-1  TRS2 = 3e-4  XTI=0  IKF=0.5  CJO = 3.9e-11
TT=33e-9   M = 0.50)
.MODEL DBREAKMOD D (RS = 5.3e-1  TRS1 = 5.5e-3  TRS2 = -9e-5)
.MODEL DPLCAPMOD D (CJO = 0.5e-10  IS = 1e-30  N = 10 M = 0.55)
.MODEL MMEDMOD PMOS (VTO = -1.17  KP = 0.6  IS=1e-30 N = 10 TOX = 1 L = 1u W = 1u RG = 12.4)
.MODEL MSTROMOD PMOS (VTO = -1.45  KP = 1.5  IS = 1e-30 N = 10 TOX = 1 L = 1u W = 1u)
.MODEL MWEAKMOD PMOS (VTO = -0.99  KP = 0.05 IS = 1e-30 N = 10 TOX = 1 L = 1u W = 1u RG = 124 RS = 0.1)
.MODEL RBREAKMOD RES (TC1 = 5.5e-4  TC2 = -1e-7)
.MODEL RDRAINMOD RES (TC1 = 2.8e-3  TC2 = 4.9e-6)
.MODEL RSLCMOD RES (TC1 = 3.7e-3 TC2 = 7.8e-6)
.MODEL RSOURCEMOD RES (TC1 = 3e-3 TC2 = 5.2e-6)
.MODEL RVTHRESMOD RES (TC1 = 9e-4 TC2 = 3e-7)
.MODEL RVTEMPMOD RES (TC1 = -5.5e-4  TC2 = -1e-9)

.MODEL S1AMOD VSWITCH (RON = 1e-5  ROFF = 0.1  VON = 0.5  VOFF= 0.2)
.MODEL S1BMOD VSWITCH (RON = 1e-5  ROFF = 0.1  VON = 0.2  VOFF= 0.5)
.MODEL S2AMOD VSWITCH (RON = 1e-5  ROFF = 0.1  VON = 0.4  VOFF= -0.1)
.MODEL S2BMOD VSWITCH (RON = 1e-5  ROFF = 0.1  VON = -0.1  VOFF= 0.4)

.ENDS
```

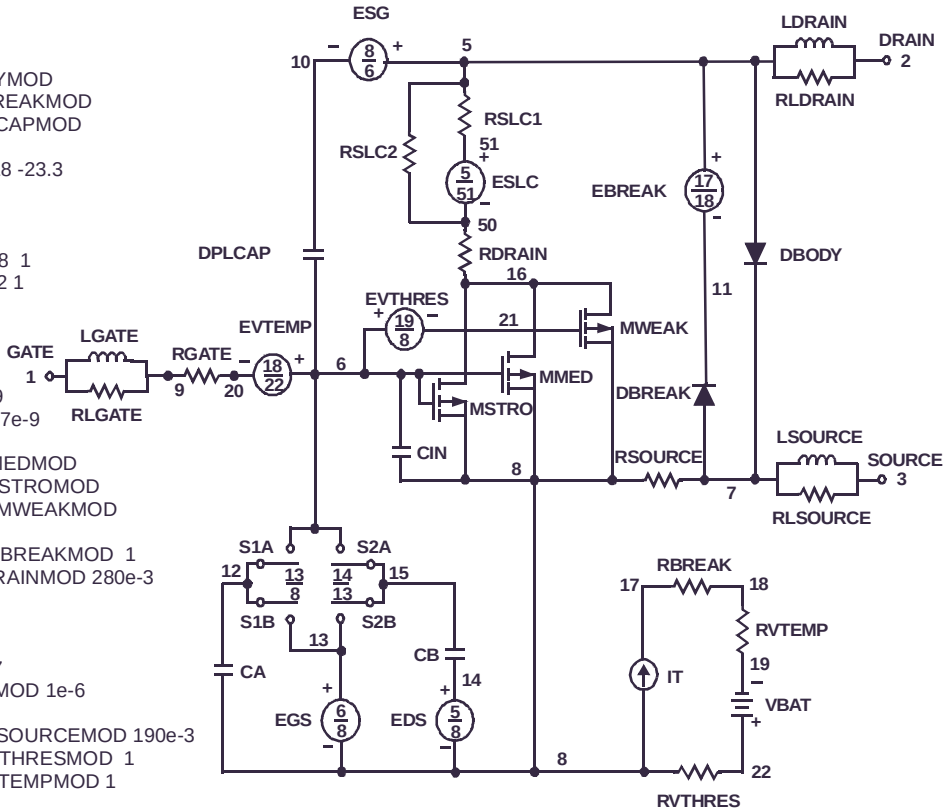

Note: For further discussion of the PSPICE model, consult **A New PSPICE Sub-Circuit for the Power MOSFET Featuring Global Temperature Options**; IEEE Power Electronics Specialist Conference Records, 1991, written by William J. Hepp and C. Frank Wheatley.

SABER Electrical Model

```
REV January 2003
template fdg6318pz n2,n1,n3
electrical n2,n1,n3
{
var i iscl
dp..model dbodymod = (isl = 7.7e-11, nl=1.277, rs = 1e-3, trs1 = 2.8e-1, trs2 = 3e-4, xti=0, cjo = 3.9e-11, ikf=0.5, tt = 33e-9, m = 0.50)
dp..model dbreakmod = (rs = 5.3e-1, trs1 = 5.5e-3, trs2 = -9.0e-5)
dp..model dplcapmod = (cjo = 0.5e-10, isl=10e-30, nl=10, m=0.55)
m..model mmedmod = (type=_p, vto = -1.17, kp=0.6, is=1e-30, tox=1)
m..model mstrongmod = (type=_p, vto = -1.45, kp = 1.5, is = 1e-30, tox = 1)
m..model mweakmod = (type=_p, vto = -0.99, kp = 0.05, is = 1e-30, tox = 1, rs=0.1)
sw_vcsp..model s1amod = (ron = 1e-5, roff = 0.1, von = 0.5, voff = 0.2)
sw_vcsp..model s1bmod = (ron = 1e-5, roff = 0.1, von = 0.2, voff = 0.5)
sw_vcsp..model s2amod = (ron = 1e-5, roff = 0.1, von = 0.4, voff = -0.1)
sw_vcsp..model s2bmod = (ron = 1e-5, roff = 0.1, von = -0.1, voff = 0.4)

c.ca n12 n8 = 0.6e-10
c.cb n15 n14 = 1.1e-10
c.cin n6 n8 = 0.75e-10

dp.dbody n5 n7 = model=dbodymod
dp.dbreak n7 n11 = model=dbreakmod
dp.dplcap n10 n6 = model=dplcapmod

i.it n8 n17 = 1

l.ldrain n2 n5 = 1e-9
l.lgate n1 n9 = 0.47e-9
l.lsource n3 n7 = 0.47e-9

m.mmed n16 n6 n8 n8 = model=mmedmod, l=1u, w=1u
m.mstrong n16 n6 n8 n8 = model=mstrongmod, l=1u, w=1u
m.mweak n16 n21 n8 n8 = model=mweakmod, l=1u, w=1u

res.rbreak n17 n18 = 1, tc1 = 5.5e-4, tc2 = -1e-7
res.rdrain n50 n16 = 280e-3, tc1 = 2.8e-3, tc2 = 4.9e-6
res.rgate n9 n20 = 12.4
res.rldrain n2 n5 = 10
res.rlgate n1 n9 = 4.7
res.rlsource n3 n7 = 4.7
res.rslc1 n5 n51= 1e-6, tc1 = 3.7e-3, tc2 =7.8e-6
res.rslc2 n5 n50 = 1e3
res.rsource n8 n7 = 190e-3, tc1 = 3e-3, tc2 =5.2e-6
res.rvtemp n18 n19 = 1, tc1 = -5.5e-4, tc2 = -1e-9
res.rvthres n22 n8 = 1, tc1 = 9e-4, tc2 = 3e-7

spe.ebreak n5 n11 n17 n18 = -23.3
spe.eds n14 n8 n5 n8 = 1
spe.egs n13 n8 n6 n8 = 1
spe.esg n5 n10 n6 n8 = 1
spe.evtemp n20 n6 n18 n22 = 1
spe.evthres n6 n21 n19 n8 = 1

sw_vcsp.s1a n6 n12 n13 n8 = model=s1amod
sw_vcsp.s1b n13 n12 n13 n8 = model=s1bmod
sw_vcsp.s2a n6 n15 n14 n13 = model=s2amod
sw_vcsp.s2b n13 n15 n14 n13 = model=s2bmod

v.vbat n22 n19 = dc=1

equations {
i (n51->n50) +=iscl
iscl: v(n51,n50) = ((v(n5,n51)/(1e-9+abs(v(n5,n51))))*((abs(v(n5,n51)*1e6/20))** 2.5))
}
}
```

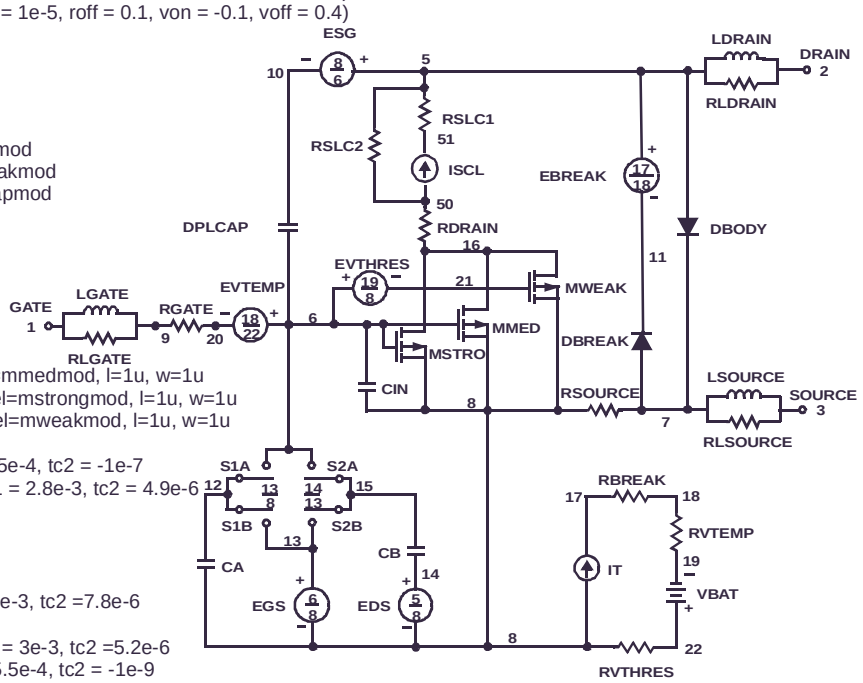

SPICE Thermal Model

REV January 2003
FDG6318PZ_JA Junction Ambient
Copper Area= 1sq.in

CTHERM1 Junction c2 0.17e-4
CTHERM2 c2 c3 2.7e-4
CTHERM3 c3 c4 5.5e-4
CTHERM4 c4 c5 1.4e-3
CTHERM5 c5 c6 2.2e-3
CTHERM6 c6 c7 2.6e-3
CTHERM7 c7 c8 6.6e-3
CTHERM8 c8 Ambient 0.29

RTHERM1 Junction c2 11.2
RTHERM2 c2 c3 11.5
RTHERM3 c3 c4 12.5
RTHERM4 c4 c5 27
RTHERM5 c5 c6 81
RTHERM6 c6 c7 88
RTHERM7 c7 c8 92
RTHERM8 c8 Ambient 93

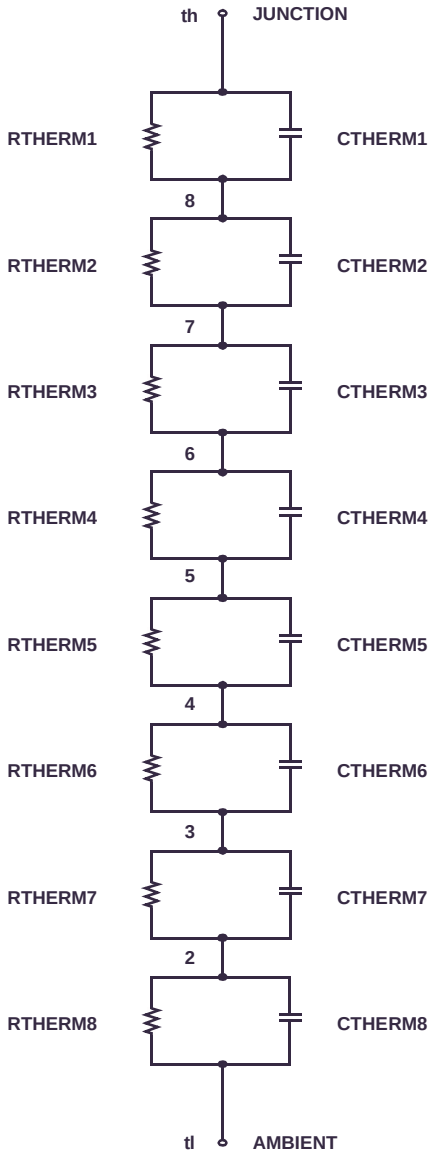

SABER Thermal Model

```
SABER thermal model FDG6318PZ
Copper Area= 1sq.in
template thermal_model th tl
thermal_c th, tl
{
ctherm.ctherm1 th c2 = 0.17e-4
ctherm.ctherm2 c2 c3 = 2.7e-4
ctherm.ctherm3 c3 c4 = 5.5e-4
ctherm.ctherm4 c4 c5 = 1.4e-3
ctherm.ctherm5 c5 c6 = 2.2e-3
ctherm.ctherm6 c6 c7 = 2.6e-3
ctherm.ctherm7 c7 c8 = 6.6e-3
ctherm.ctherm8 c8 tl = 0.29

rtherm.rtherm1 th c2 = 11.2
rtherm.rtherm2 c2 c3 = 11.5
rtherm.rtherm3 c3 c4 = 12.5
rtherm.rtherm4 c4 c5 = 27
rtherm.rtherm5 c5 c6 = 81
rtherm.rtherm6 c6 c7 = 88
rtherm.rtherm7 c7 c8 = 92
rtherm.rtherm8 c8 tl = 93
}
```

©2003 Fairchild Semiconductor Corporation

TRADEMARKS

The following are registered and unregistered trademarks Fairchild Semiconductor owns or is authorized to use and is not intended to be an exhaustive list of all such trademarks.

ACEx™	FACT™	ImpliedDisconnect™	PACMAN™	SPM™
ActiveArray™	FACT Quiet Series™	ISOPLANAR™	POP™	Stealth™
Bottomless™	FAST®	LittleFET™	Power247™	SuperSOT™-3
CoolFET™	FASTr™	MicroFET™	PowerTrench®	SuperSOT™-6
CROSSVOLT™	FRFET™	MicroPak™	QFET™	SuperSOT™-8
DOME™	GlobalOptoisolator™	MICROWIRE™	QS™	SyncFET™
EcoSPARK™	GTO™	MSX™	QT Optoelectronics™	TinyLogic®
E^2CMOS™	HiSeC™	MSXPro™	Quiet Series™	TruTranslation™
EnSigna™	I^2C™	OCX™	RapidConfigure™	UHC™
Across the board. Around the world.™		OCXPro™	RapidConnect™	UltraFET®
The Power Franchise™		OPTOLOGIC®	SILENT SWITCHER®	VCX™
Programmable Active Droop™		OPTOPLANAR™	SMART START™	

DISCLAIMER

FAIRCHILD SEMICONDUCTOR RESERVES THE RIGHT TO MAKE CHANGES WITHOUT FURTHER NOTICE TO ANY PRODUCTS HEREIN TO IMPROVE RELIABILITY, FUNCTION OR DESIGN. FAIRCHILD DOES NOT ASSUME ANY LIABILITY ARISING OUT OF THE APPLICATION OR USE OF ANY PRODUCT OR CIRCUIT DESCRIBED HEREIN; NEITHER DOES IT CONVEY ANY LICENSE UNDER ITS PATENT RIGHTS, NOR THE RIGHTS OF OTHERS.

LIFE SUPPORT POLICY

FAIRCHILD'S PRODUCTS ARE NOT AUTHORIZED FOR USE AS CRITICAL COMPONENTS IN LIFE SUPPORT DEVICES OR SYSTEMS WITHOUT THE EXPRESS WRITTEN APPROVAL OF FAIRCHILD SEMICONDUCTOR CORPORATION.

As used herein:

1. Life support devices or systems are devices or systems which, (a) are intended for surgical implant into the body, or (b) support or sustain life, or (c) whose failure to perform when properly used in accordance with instructions for use provided in the labeling, can be reasonably expected to result in significant injury to the user.

2. A critical component is any component of a life support device or system whose failure to perform can be reasonably expected to cause the failure of the life support device or system, or to affect its safety or effectiveness.

PRODUCT STATUS DEFINITIONS

Definition of Terms

Datasheet Identification	Product Status	Definition
Advance Information	Formative or In Design	This datasheet contains the design specifications for product development. Specifications may change in any manner without notice.
Preliminary	First Production	This datasheet contains preliminary data, and supplementary data will be published at a later date. Fairchild Semiconductor reserves the right to make changes at any time without notice in order to improve design.
No Identification Needed	Full Production	This datasheet contains final specifications. Fairchild Semiconductor reserves the right to make changes at any time without notice in order to improve design.
Obsolete	Not In Production	This datasheet contains specifications on a product that has been discontinued by Fairchild semiconductor. The datasheet is printed for reference information only.

Littlediode supplies new, hard to find or obsolete electronic components and semiconductors all over the world.

With over two million different components listed you are sure to find the part you need.

Feel free to visit us today at our online store:

LittleDiode.com

Looking forward to providing you with the best possible service.