HI117

PNP EPITAXIAL PLANAR TRANSISTOR

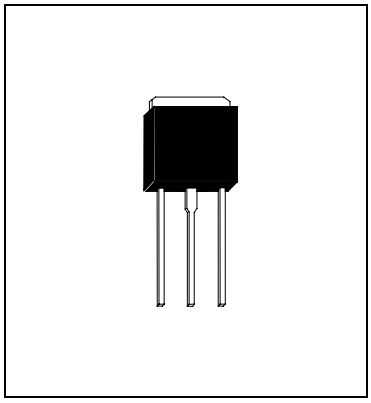

Description

The HI117 is designed for use in general purpose amplifier and low-speed switching applications.

Absolute Maximum Ratings (Ta=25°C)

- Maximum Temperatures
  Storage Temperature ..... -55 ~ +150 °C
  Junction Temperature ..... +150 °C Maximum
- Maximum Power Dissipation
  Total Power Dissipation (Tc=25°C) ..... 25 W
- Maximum Voltages and Currents
  BVCBO Collector to Base Voltage ..... -100 V
  BVCEO Collector to Emitter Voltage ..... -100 V
  BVEBO Emitter to Base Voltage ..... -5 V
  IC Collector Current (Continue) ..... -4 A
  IC Collector Current (Peak) ..... -6 A

Characteristics (Ta=25°C)

Symbol	Min.	Typ.	Max.	Unit	Test Conditions
BVCBO	-100	-	-	V	IC=-1mA
BVCEO	-100	-	-	V	IC=-30mA
ICBO	-	-	-1	mA	VCB=-100V
ICEO	-	-	-2	mA	VCE=-50V
IEBO	-	-	-2	mA	VEB=-5V
*VCE(sat)	-	-	-2.5	V	IC=-2A, IB=-8mA
*VBE(on)	-	-	-2.8	V	IC=-2A, VCE=-4V
*hFE1	1	-	-	K	IC=-1A, VCE=-4V
*hFE2	500	-	-		IC=-2A, VCE=-4V
Cob	-	-	200	pF	VCB=-10V, f=0.1MHz

*Pulse Test : Pulse Width ≤380us, Duty Cycle≤2%

Darlington Schematic

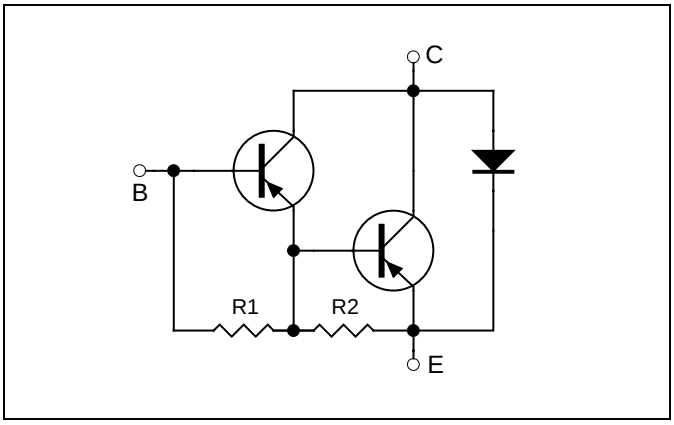

Characteristics Curve

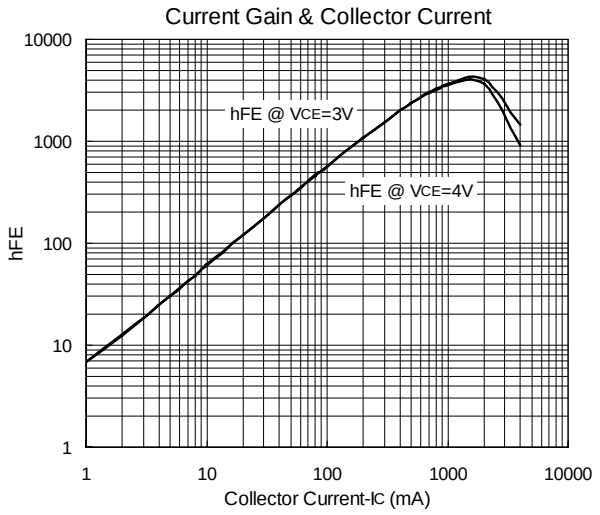

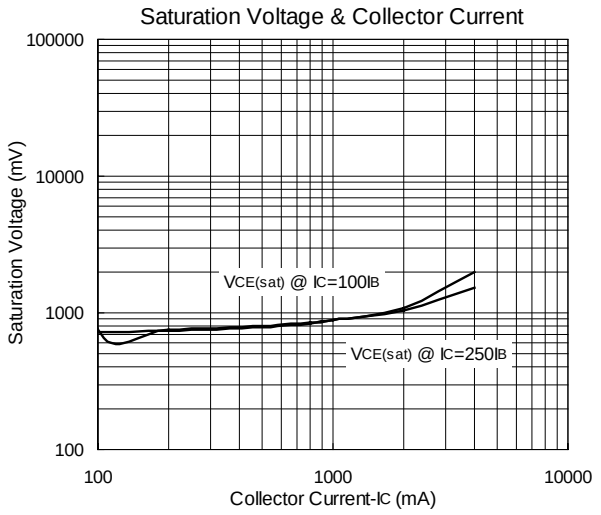

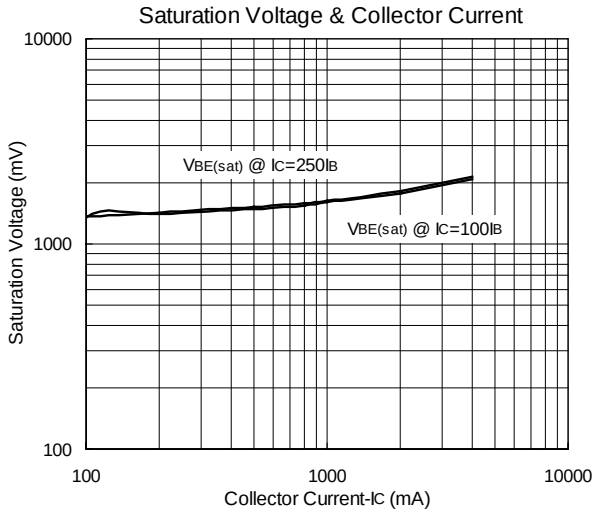

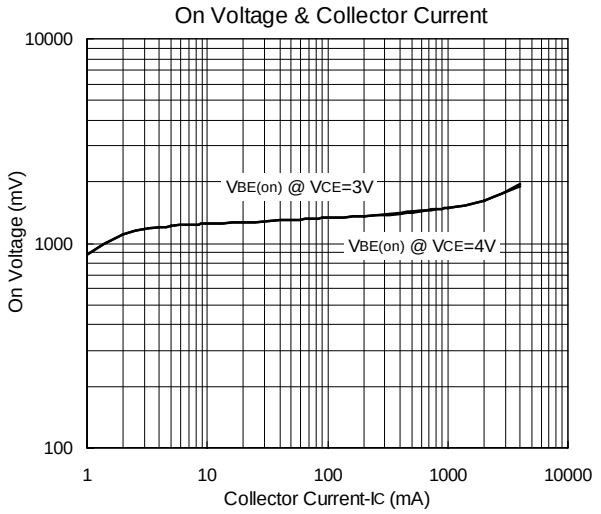

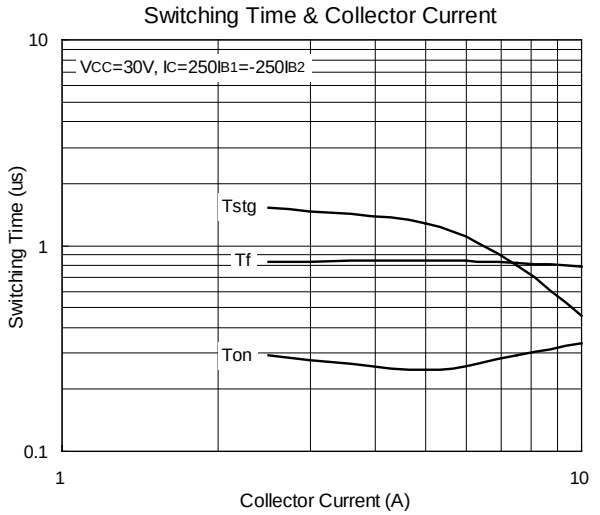

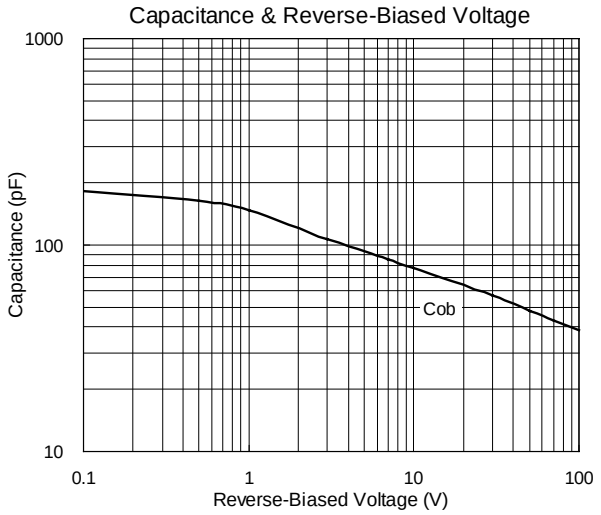

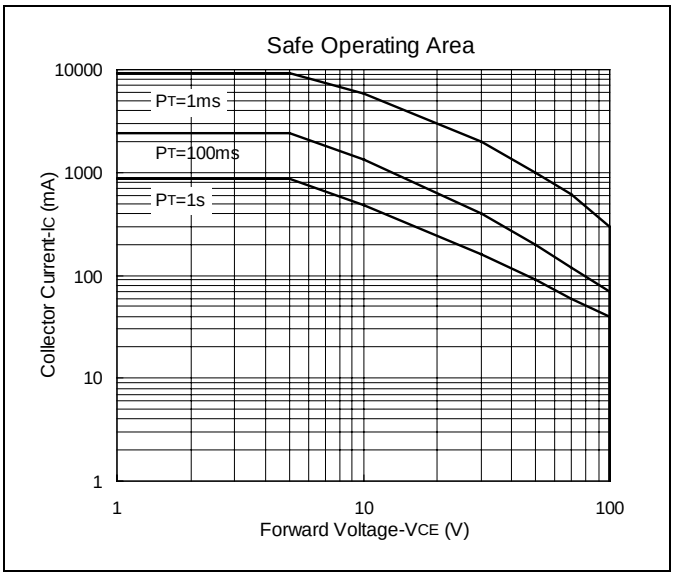
Safe Operating Area
10000
1000
100
10
1
PT=1ms
PT=100ms
PT=1s
Collector Current-IC (mA)
1
10
100
Forward Voltage-VCE (V)

TO-251 Dimension

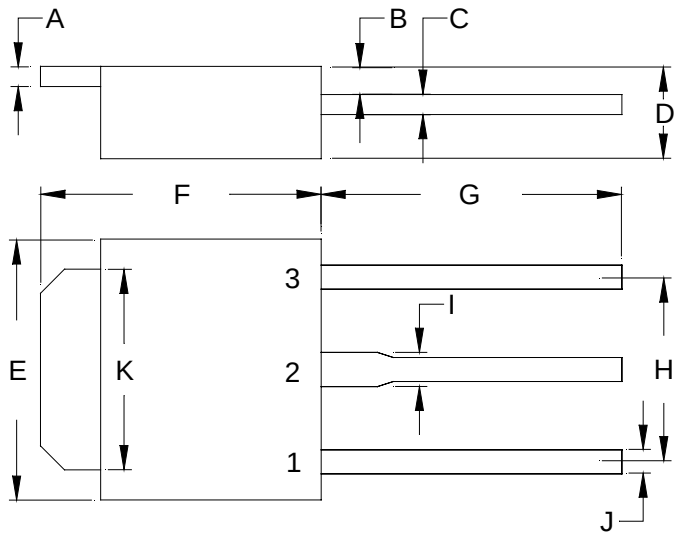

3-Lead TO-251 Plastic Package
HSMC Package Code : I

Marking:

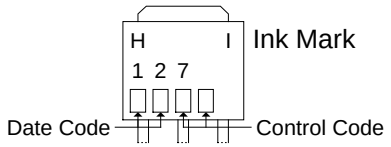

Style : Pin 1.Base 2.Collector 3.Emitter

*:Typical

DIM	Inches		Millimeters		DIM	Inches		Millimeters	
	Min.	Max.	Min.	Max.		Min.	Max.	Min.	Max.
A	0.0177	0.0217	0.45	0.55	G	0.2559	-	6.50	-
B	0.0354	0.0591	0.90	1.50	H	-	*0.1811	-	*4.60
C	0.0177	0.0236	0.45	0.60	I	-	0.0354	-	0.90
D	0.0866	0.0945	2.20	2.40	J	-	0.0315	-	0.80
E	0.2520	0.2677	6.40	6.80	K	0.2047	0.2165	5.20	5.50
F	0.2677	0.2835	6.80	7.20					

Notes : 1.Dimension and tolerance based on our Spec. dated May. 24,1995.
2.Controlling dimension : millimeters.
3.Maximum lead thickness includes lead finish thickness, and minimum lead thickness is the minimum thickness of base material.
4.If there is any question with packing specification or packing method, please contact your local HSMC sales office.

Material :

- Lead : 42 Alloy ; solder plating
- Mold Compound : Epoxy resin family, flammability solid burning class:UL94V-0

Important Notice:

- All rights are reserved. Reproduction in whole or in part is prohibited without the prior written approval of HSMC.
- HSMC reserves the right to make changes to its products without notice.
- ***HSMC semiconductor products are not warranted to be suitable for use in Life-Support Applications, or systems.***
- HSMC assumes no liability for any consequence of customer product design, infringement of patents, or application assistance.

Head Office And Factory :

- **Head Office** (Hi-Sincerity Microelectronics Corp.) : 10F.,No. 61, Sec. 2, Chung-Shan N. Rd. Taipei Taiwan R.O.C.
  Tel : 886-2-25212056 Fax : 886-2-25632712, 25368454
- **Factory 1 :** No. 38, Kuang Fu S. Rd., Fu-Kou Hsin-Chu Industrial Park Hsin-Chu Taiwan. R.O.C
  Tel : 886-3-5983621~5 Fax : 886-3-5982931

Littlediode supplies new, hard to find or obsolete electronic components and semiconductors all over the world.

With over two million different components listed you are sure to find the part you need.

Feel free to visit us today at our online store:

LittleDiode.com

Looking forward to providing you with the best possible service.