## Silicon Schottky Diode

- High current rectifier Schottky diode with low $V_F$ drop
- Low voltage, low inductance
- For power supply
- For detection and step-up-conversion

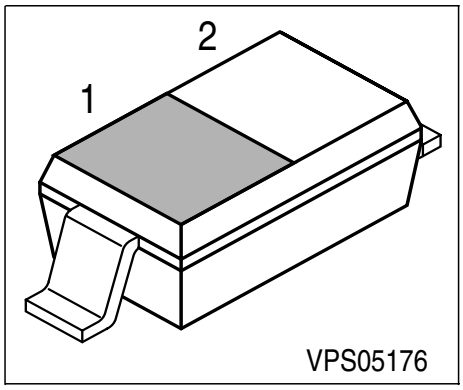


**ESD**: **E**lectro**s**tatic **d**ischarge sensitive device, observe handling precaution!

| Type | Marking | Pin Configuration | | Package |
|---|---|---|---|---|
| BAT 60B | blue/5 | 1 = C | 2 = A | SOD-323 |

**Maximum Ratings**

| Parameter | Symbol | Value | Unit |
|---|---|---|---|
| Diode reverse voltage | $V_R$ | 10 | V |
| Forward current | $I_F$ | 3 | A |
| Surge forward current (t < 10ms) | $I_{FSM}$ | 5 | |
| Total power dissipation, $T_S$ = 28 °C | $P_{tot}$ | 1350 | mW |
| Junction temperature | $T_j$ | 150 | °C |
| Storage temperature | $T_{stg}$ | -55 ... 150 | |

**Thermal Resistance**

| | | | |
|---|---|---|---|
| Junction - ambient [1)] | $R_{thJA}$ | ≤ 160 | K/W |
| Junction - soldering point | $R_{thJS}$ | ≤ 90 | |

1) Package mounted on epoxy pcb 40mm x 40mm x 1.5mm / 0.5cm$^2$ Cu

**Electrical Characteristics** at $T_A$ = 25 °C, unless otherwise specified.

| Parameter | Symbol | Values | | | Unit |
|---|---|---|---|---|---|
| | | min. | typ. | max. | |
| **DC characteristics** | | | | | |
| Reverse current | $I_R$ | | | | µA |
| $V_R$ = 5 V | | - | 5 | - | |
| $V_R$ = 8 V | | - | 10 | - | |
| Reverse current | $I_R$ | | | | |
| $V_R$ = 5 V, $T_A$ = 80 °C | | - | 100 | - | |
| $V_R$ = 8 V, $T_A$ = 80 °C | | - | 410 | - | |
| Forward voltage | $V_F$ | | | | V |
| $I_F$ = 10 mA | | - | 0.24 | - | |
| $I_F$ = 100 mA | | - | 0.3 | - | |
| $I_F$ = 1000 mA | | - | 0.4 | - | |
| **AC characteristics** | | | | | |
| Diode capacitance<br>$V_R$ = 5 V, $f$ = 1 MHz | $C_T$ | - | 25 | - | pF |

**Forward current** $I_F = f(T_A{}^*; T_S)$

* Package mounted on epoxy

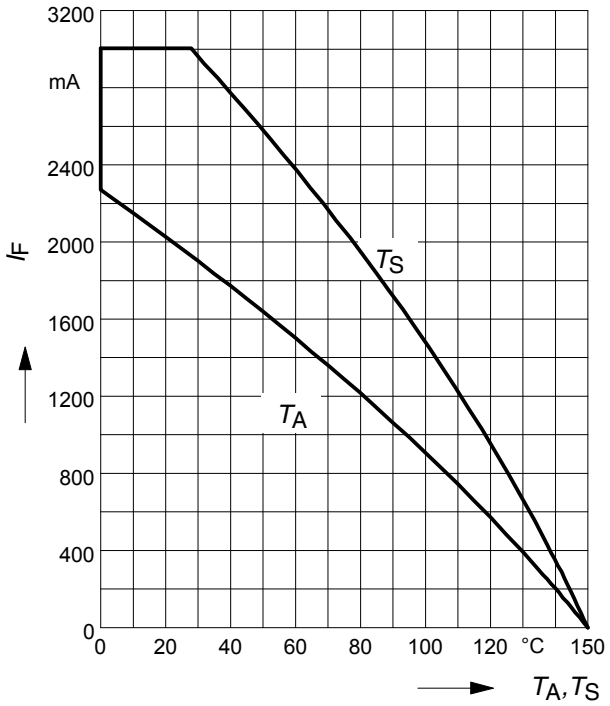


**Reverse current** $I_R = f(T_A)$

$V_R$ = 8V

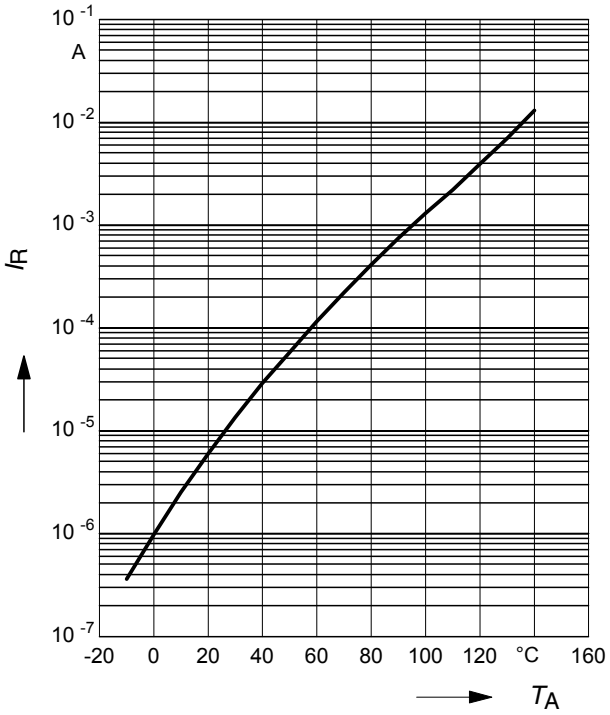


**Permissible Pulse Load** $R_{thJS} = f(t_p)$

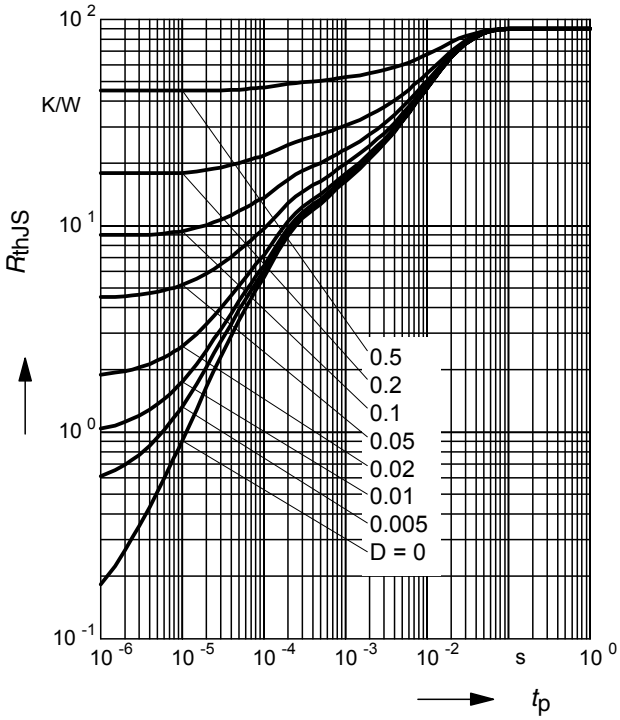


**Permissible Pulse Load**

$I_{Fmax} / I_{FDC} = f(t_p)$

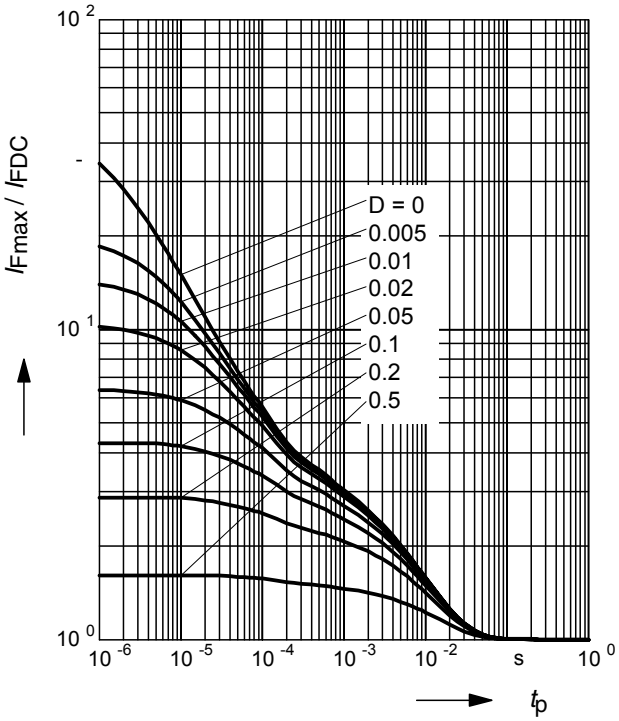

Littlediode supplies new, hard to find or obsolete electronic components and semiconductors all over the world.

With over two million different components listed you are sure to find the part you need.

Feel free to visit us today at our online store:

**LittleDiode.com**

Looking forward to providing you with the best possible service.