1400 SERIES

Bobbin Type Inductors

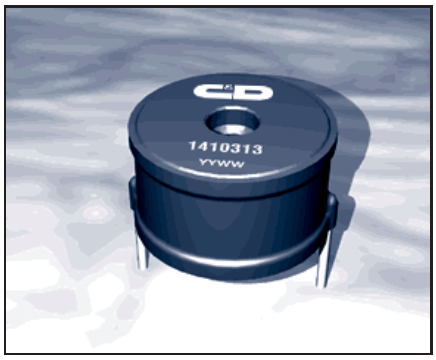

FEATURES

- Radial Format
- –40°C to 85°C Operating Temp
- Up to 13A I_{DC}
- 10µH to 22mH
- Low DC Resistance
- Fully Tinned Leads
- PCB Mounting Hole
- Low Temperature Dependance
- MIL-I-23053/5 Class I&II Sleeving
- Custom Parts Available

DESCRIPTION

The 1400 Series is suitable for many power supply and other general purpose filtering applications. The use of a non-magnetic screw will ensure mechanical stability.

SELECTION GUIDE

	Inductance (±10% at 1kHz)	RDC (max.)	IDC (cont.)	Temp rise (at IDC)	Nominal Q at f kHz		Nominal Self Resonant Frequency	Mechanical Dimensions					Footprint	
Order Code	µH	Ω	A	°C	Q	f	MHz	a	b	c	d	Øe	f	Øg
1410313	10	0.007	13	20	54	50	20.7	27.0	24.4	14.0	1.30	4.5*	23.9	2.6
1415312	15	0.009	12	25	42	50	12.7	27.0	24.4	14.0	1.30	4.5*	23.9	2.6
1422311	22	0.011	11	27	64	100	9.3	27.0	24.4	14.0	1.30	4.5*	23.9	2.6
1433393	33	0.015	9.3	25	27	50	9.1	27.0	24.4	14.0	1.30	4.5*	23.9	2.6
1447383	47	0.019	8.3	25	40	100	6.0	27.0	24.4	18.5	1.30	4.5*	23.9	2.6
1447385	47	0.021	8.5	26	33	100	6.7	26.8	24.4	14.0	1.20	4.5*	23.8	2.4
1468362	68	0.032	6.2	27	32	100	5.3	26.5	24.4	14.0	1.08	4.5*	23.7	2.1
1468373	68	0.022	7.3	27	45	100	5.3	27.0	24.4	18.5	1.30	4.5*	23.9	2.6
1410454	100	0.042	5.4	27	24	100	4.6	26.4	24.4	14.0	1.02	4.5*	23.6	2.0
1410460	100	0.033	6.0	29	37	100	3.9	26.8	24.4	18.5	1.20	4.5*	23.8	2.4
1410478	100	0.040	7.8	28	34	50	3.3	32.4	29.8	21.8	1.30	5.1	29.3	2.6
1415440	150	0.069	4.0	26	24	50	3.4	26.2	24.4	14.0	0.90	4.5*	23.5	1.8
1415449	150	0.051	4.9	27	34	50	2.9	26.4	24.4	18.5	1.02	4.5*	23.6	2.0
1415465	150	0.042	6.5	29	46	100	2.4	32.2	29.8	21.8	1.20	5.1	29.2	2.4
1422435	220	0.096	3.5	29	22	50	2.8	26.1	24.4	14.0	0.85	4.5*	23.5	1.7
1422441	220	0.073	4.1	25	33	100	2.3	26.3	24.4	18.5	0.97	4.5*	23.6	1.9
1422455	220	0.062	5.5	27	30	50	2.2	32.1	29.8	21.8	1.14	5.1	29.1	2.2
1430430	300	0.140	3.0	23	26	50	2.6	25.9	24.4	14.0	0.75	4.5*	23.4	1.5
1430433	300	0.100	3.5	25	37	50	2.2	26.2	24.4	18.5	0.90	4.5*	23.5	1.8
1430450	300	0.080	5.0	29	28	50	1.7	31.8	29.8	21.8	1.02	5.1	29.0	2.0
1433428	330	0.150	2.8	24	22	50	2.5	25.9	24.4	14.0	0.76	4.5*	23.4	1.5
1433433	330	0.107	3.3	25	29	50	2.0	26.2	24.4	18.5	0.90	4.5*	23.5	1.8
1433445	330	0.091	4.5	29	25	50	1.6	31.8	29.8	21.8	1.02	5.1	29.0	2.0
1447423	470	0.222	2.3	28	34	50	2.0	25.7	24.4	14.0	0.67	4.5*	23.3	1.3
1447427	470	0.149	2.7	24	25	50	1.6	26.1	24.4	18.5	0.85	4.5*	23.5	1.7
1447440	470	0.125	4.0	29	24	50	1.4	31.7	29.8	21.8	0.97	5.1	29.0	1.9
1468420	680	0.276	2.0	25	23	50	1.6	25.7	24.4	14.0	0.67	4.5*	23.3	1.3
1468422	680	0.226	2.2	28	28	50	1.3	25.9	24.4	18.5	0.75	4.5*	23.4	1.5
1468431	680	0.173	3.1	27	60	10	1.0	31.6	29.8	21.8	0.90	5.1	28.9	1.8
1410516	1.0mH	0.419	1.6	24	30	50	1.4	25.6	24.4	14.0	0.60	4.5*	23.2	1.2
1410517	1.0mH	0.336	1.7	26	35	50	1.2	25.7	24.4	18.5	0.67	4.5*	23.3	1.3
1410524	1.0mH	0.277	2.4	28	33	50	1.0	31.4	29.8	21.8	0.79	5.1	28.8	1.5
1415513	1.5mH	0.630	1.3	27	34	50	1.0	25.5	24.4	14.0	0.54	4.5*	23.1	1.0
1415514	1.5mH	0.518	1.4	26	47	50	0.8	25.6	24.4	18.5	0.60	4.5*	23.2	1.2
1415517	1.5mH	0.374	1.7	26	28	50	0.7	31.3	29.8	21.8	0.75	5.1	28.8	1.5
1422509	2.2mH	0.916	0.9	25	43	50	0.9	25.3	24.4	14.0	0.48	4.5*	23.1	0.9
1422512	2.2mH	0.649	1.2	25	33	50	0.7	25.6	24.4	18.5	0.60	4.5*	23.2	1.2
1422514	2.2mH	0.622	1.4	27	33	50	0.6	31.1	29.8	21.8	0.67	5.1	28.7	1.3
1433507	3.3mH	1.428	0.7	22	45	50	0.8	25.2	24.4	14.0	0.43	4.5*	23.0	0.8
1433510	3.3mH	1.992	1.0	26	20	50	0.7	25.5	24.4	18.5	0.54	4.5*	23.1	1.0
1433512	3.3mH	0.861	1.2	26	20	50	0.5	31.0	29.8	21.8	0.60	5.1	28.6	1.2

* The drilled hole for these devices have a 6.10Ø x 2.40 countersink

1400 SERIES

Bobbin Type Inductors

SELECTION GUIDE

Order Code	Inductance (±10% at 1kHz)	RDC (max.)	IDC (cont.)	Temp rise (at IDC)	Nominal Q at f kHz		Nominal Self Resonant Frequency	Mechanical Dimensions					Footprint	
	µH	Ω	A	°C	Q	f	MHz	a	b	c	d	Øe	f	Øg
1447506	4.7mH	2.200	0.6	27	60	50	0.6	25.2	24.4	14.0	0.39	4.5*	23.0	0.7
1447508	4.7mH	1.436	0.8	26	65	50	0.5	25.3	24.4	18.5	0.48	4.5*	23.1	0.9
1447509	4.7mH	1.250	0.9	28	57	10	0.5	30.9	29.8	21.8	0.54	5.1	28.5	1.0
1468505	6.8mH	2.810	0.5	24	50	50	0.5	25.2	24.4	14.0	0.39	4.5*	23.0	0.7
1468507	6.8mH	2.214	0.7	25	47	50	0.4	25.2	24.4	18.5	0.43	4.5*	23.0	0.8
1468508	6.8mH	1.884	0.8	26	30	50	0.4	30.7	29.8	21.8	0.48	5.1	28.5	0.9
1410604	10mH	4.340	0.4	22	51	50	0.4	25.1	24.4	14.0	0.34	4.5*	22.9	0.6
1410605	10mH	3.394	0.5	24	48	50	0.3	25.2	24.4	18.5	0.39	4.5*	23.0	0.7
1410606	10mH	2.294	0.6	25	48	50	0.2	30.9	29.8	21.8	0.54	5.1	28.5	1.0
1415604	15mH	4.912	0.4	25	61	10	0.2	25.1	24.4	18.5	0.34	4.5*	22.9	0.6
1415605	15mH	3.740	0.5	21	55	10	0.2	30.6	29.8	21.8	0.43	5.1	28.4	0.8
1422604	22mH	6.926	0.4	26	30	50	0.2	30.5	29.8	21.8	0.34	5.1	28.3	0.6

* The drilled hole for these devices have a 6.10Ø x 2.40 countersink

TYPICAL CORE CHARACTERISTICS

Inductance Temperature Coefficient	Resistance Temperature Coefficient	Curie Temperature T_C	Saturation Flux B_{SAT}
215ppm	4100ppm	130°C	240mT

ABSOLUTE MAXIMUM RATINGS

Operating free air temperature range	–40°C to 85°C
Storage temperature range	–55°C to 125°C

MECHANICAL DIMENSIONS

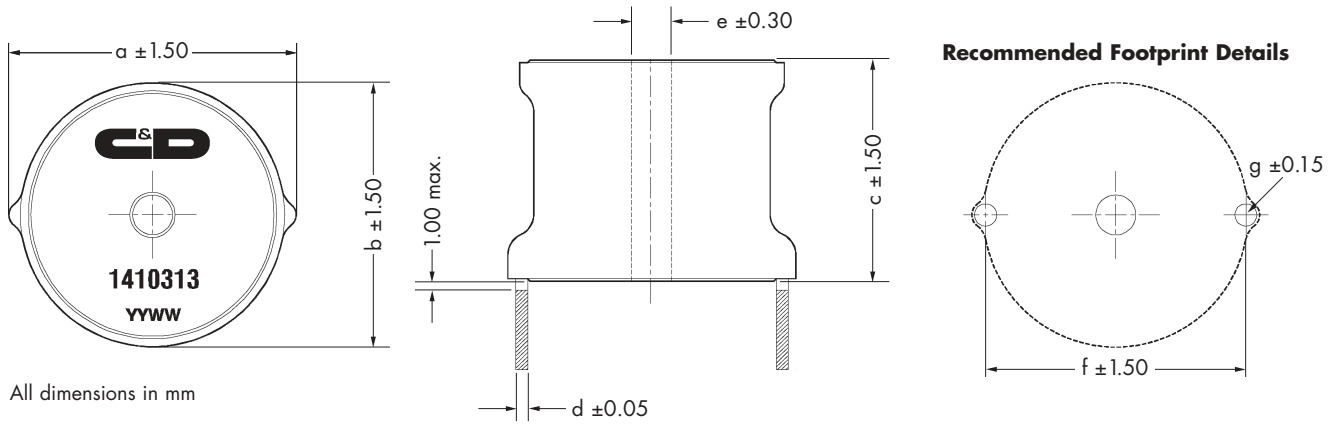

All dimensions in mm

C&D Technologies (NCL) Limited reserve the right to alter or improve the specification, internal design or manufacturing process at any time, without notice. Please check with your supplier or visit our web site to ensure that you have the current and complete specification for your product before use.

© C&D Technologies (NCL) Limited 2003 NMP 1400.5

No part of this publication may be copied, transmitted or stored in a retrieval system or reproduced in any way including, but not limited to, photography, photocopy, magnetic or other recording means, without prior written permission from C&D Technologies (NCL) Limited.

Instructions for use are available from www.cdpoweronline.com

C&D Technologies (NCL) Ltd
Tanners Drive, Blakelands North
Milton Keynes MK14 5BU, England
Tel: +44 (0)1908 615232
Fax: +44 (0)1908 617545
email: info@cdtechno-ncl.com

C&D Technologies Inc.
3400 E Britannia Drive, Tucson,
Arizona 85706, USA
Tel: +1 (800) 547-2537
Fax: +1 (520) 741-4598
email: sales@cdtechno.com

www.cdpoweronline.com

C&D TECHNOLOGIES
Power Solutions

Littlediode supplies new, hard to find or obsolete electronic components and semiconductors all over the world.

With over two million different components listed you are sure to find the part you need.

Feel free to visit us today at our online store:

LittleDiode.com

Looking forward to providing you with the best possible service.