National Semiconductor

June 12, 2008

LM185QML
Adjustable Micropower Voltage References

General Description

The LM185 are micropower 3-terminal adjustable band-gap voltage reference diodes. Operating from 1.24 to 5.3V and over a 10μA to 20mA current range, they feature exceptionally low dynamic impedance and good temperature stability. On-chip trimming is used to provide tight voltage tolerance. Since the LM185 band-gap reference uses only transistors and resistors, low noise and good long-term stability result.

Careful design of the LM185 has made the device tolerant of capacitive loading, making it easy to use in almost any reference application. The wide dynamic operating range allows its use with widely varying supplies with excellent regulation.

The extremely low power drain of the LM185 makes it useful for micropower circuitry. This voltage reference can be used to make portable meters, regulators or general purpose analog circuitry with battery life approaching shelf life. Further, the wide operating current allows it to replace older references with a tighter tolerance part.

Features

- Adjustable from 1.24V to 5.30V
- Operating current of 10μA to 20mA
- 1Ω dynamic impedance
- Low temperature coefficient

Ordering Information

NS Part Number	SMD Part Number	NS Package Number	Package Description
LM185BE/883		E20A	20LD Leadless Chip Carrier
LM185BH/883		H03H	3LD; T0–46 Metal Can
LM185BYH/883		H03H	3LD; T0–46 Metal Can
LM185BYH-SMD	5962–9091401MXA	H03H	3LD; T0–46 Metal Can
LM185BWG/883	5962–9091402QYA	WG10A	10LD Ceramic SOIC

Connection Diagrams

TO-46
Metal Can Package

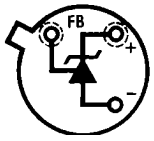

20156301
Bottom View

20-Leadless Chip Carrier

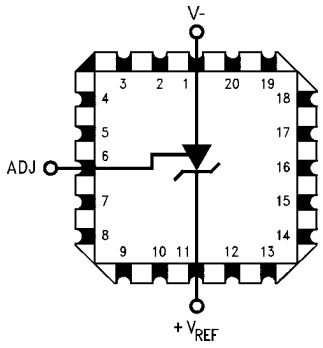

20156315
Top View

© 2008 National Semiconductor Corporation

10-Lead Ceramic SOIC

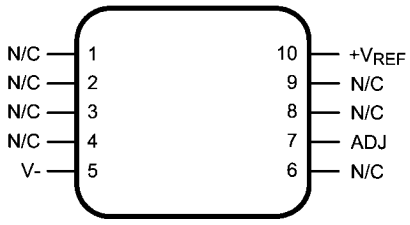

20156303

Top View

Block Diagram

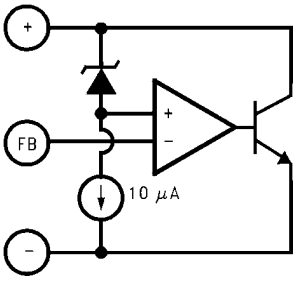

20156313

Schematic Diagram

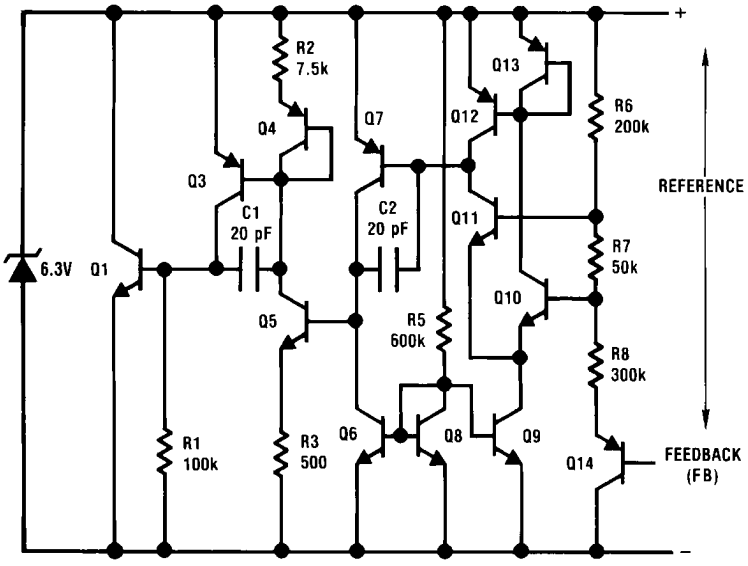

20156308

Absolute Maximum Ratings (Note 1)

Reverse Current	30mA
Forward Current	10mA
Operating Temperature Range	$-55°C \leq T_A \leq 125°C$
Storage Temperature	$-55°C \leq T_A \leq 150°C$
Maximum Junction Temperature T_{Jmax}	150°C
Lead Temperature (soldering, 10 seconds)	300°C
Thermal Resistance	
θ_{JA}	
LCC Package (Still Air)	100°C/W
LCC Package (500LF/Min Air flow)	73°C/W
Metal Can Package (Still Air)	300°C/W
Metal Can Package (500LF/Min Air flow)	139°C/W
Ceramic SOIC Package (Still Air)	194°C/W
Ceramic SOIC Package (500LF/Min Air flow)	128°C/W
θ_{JC}	
LCC Package	25°C/W
Metal Can Package	57°C/W
Ceramic SOIC Package	23°C/W
Package Weight (Typical)	
LCC Package	TBD
Metal Can Package	TBD
Ceramic SOIC Package	210mg
ESD Tolerance (Note 2)	500V

Quality Conformance Inspection

Mil-Std-883, Method 5005 - Group A

Subgroup	Description	Temp °C
1	Static tests at	25
2	Static tests at	125
3	Static tests at	-55
4	Dynamic tests at	25
5	Dynamic tests at	125
6	Dynamic tests at	-55
7	Functional tests at	25
8A	Functional tests at	125
8B	Functional tests at	-55
9	Switching tests at	25
10	Switching tests at	125
11	Switching tests at	-55
12	Settling time at	25
13	Settling time at	125
14	Settling time at	-55

LM185B Electrical Characteristics

DC Parameters

Symbol	Parameter	Conditions	Notes	Min	Max	Unit	Sub-groups
V_{Ref}	Reference Voltage	I_R = 100µA		1.228	1.252	V	1
				1.215	1.255	V	2, 3
		I_R = 9µA		1.228	1.252	V	1
		I_R = 10µA		1.215	1.255	V	2, 3
		I_R = 1mA		1.228	1.252	V	1
				1.215	1.255	V	2, 3
		I_R = 20mA		1.228	1.252	V	1
				1.215	1.255	V	2, 3
		V_R = 5.3V, I_R = 100µA		1.228	1.252	V	1
				1.215	1.255	V	2, 3
		V_R = 5.3V, I_R = 45µA		1.288	1.252	V	1
		V_R = 5.3V, I_R = 50µA		1.215	1.255	V	2, 3
		V_R = 5.3V, I_R = 1.0mA		1.288	1.252	V	1
				1.215	1.255	V	2, 3
		V_R = 5.3V, I_R = 20mA		1.288	1.252	V	1
				1.215	1.255	V	2, 3
$\Delta V_{Ref}/\Delta I_R$	Reference Voltage Change with Current	9µA ≤ I_R ≤ 1mA			1.0	mV	1
		10µA ≤ I_R ≤ 1mA			1.5	mV	2, 3
		1mA ≤ I_R ≤ 20mA			10	mV	1
					20	mV	2, 3
		V_R = 5.3V, 45µA ≤ I_R ≤ 1mA			1.0	mV	1
		V_R = 5.3V, 50µA ≤ I_R ≤ 1mA			1.5	mV	2, 3
		V_R = 5.3V, 1mA ≤ I_R ≤ 20mA			10	mV	1
					20	mV	2, 3
ΔV_{Ref} / ΔV_O	Reference Voltage Change with Output Voltage	V_R = 5.3V, I_R = 100µA			3.0	mV	1
					6.0	mV	2, 3
I_F	Feedback Current	I_R = 9µA			20	nA	1
		I_R = 10µA			25	nA	2, 3
		I_R = 20mA			20	nA	1
					25	nA	2, 3
		V_R = 5.3V, I_R = 45µA			20	nA	1
		V_R = 5.3V, I_R = 50µA			25	nA	2, 3
		V_R = 5.3V, I_R = 20mA			20	nA	1
					25	nA	2, 3
I_C	Minimum Operating Current	V_R = V_{Ref}	(Note 3)		9.0	µA	1
			(Note 3)		10	µA	2, 3
		V_R = 5.3V	(Note 3)		45	µA	1
			(Note 3)		50	µA	2, 3

LM185BY Electrical Characteristics

DC Parameters

Symbol	Parameter	Conditions	Notes	Min	Max	Unit	Sub-groups
V_{Ref}	Reference Voltage	I_R = 100µA		1.228	1.252	V	1
				1.215	1.255	V	2, 3
		I_R = 9µA		1.228	1.252	V	1
		I_R = 10µA		1.215	1.255	V	2, 3
		I_R = 1mA		1.228	1.252	V	1
				1.215	1.255	V	2, 3
		I_R = 20mA		1.228	1.252	V	1
				1.215	1.255	V	2, 3
		V_R = 5.3V, I_R = 100µA		1.228	1.252	V	1
				1.215	1.255	V	2, 3
		V_R = 5.3V, I_R = 45µA		1.288	1.252	V	1
		V_R = 5.3V, I_R = 50µA		1.215	1.255	V	2, 3
		V_R = 5.3V, I_R = 1.0mA		1.288	1.252	V	1
				1.215	1.255	V	2, 3
		V_R = 5.3V, I_R = 20mA		1.288	1.252	V	1
				1.215	1.255	V	2, 3
$\Delta V_{Ref}/\Delta I_R$	Reference Voltage Change with Current	9µA ≤ I_R ≤ 1mA			1.0	mV	1
		10µA ≤ I_R ≤ 1mA			1.5	mV	2, 3
		1mA ≤ I_R ≤ 20mA			10	mV	1
					20	mV	2, 3
		V_R = 5.3V, 45µA ≤ I_R ≤ 1mA			1.0	mV	1
		V_R = 5.3V, 50µA ≤ I_R ≤ 1mA			1.5	mV	2, 3
		V_R = 5.3V, 1mA ≤ I_R ≤ 20mA			10	mV	1
					20	mV	2, 3
ΔV_{Ref} / ΔV_O	Reference Voltage Change with Output Voltage	V_R = 5.3V, I_R = 100µA			3.0	mV	1
					6.0	mV	2, 3
I_F	Feedback Current	I_R = 9µA			20	nA	1
		I_R = 10µA			25	nA	2, 3
		I_R = 20mA			20	nA	1
					25	nA	2, 3
		V_R = 5.3V, I_R = 45µA			20	nA	1
		V_R = 5.3V, I_R = 50µA			25	nA	2, 3
		V_R = 5.3V, I_R = 20mA			20	nA	1
					25	nA	2, 3
I_C	Minimum Operating Current	V_R = V_{Ref}	(Note 3)		9.0	µA	1
			(Note 3)		10	µA	2, 3
		V_R = 5.3V	(Note 3)		45	µA	1
			(Note 3)		50	µA	2, 3
T_C	Temperature Coefficient		(Note 4)		50	PPM/°C	1, 2, 3

Note 1: Absolute Maximum Ratings indicate limits beyond which damage to the device may occur. Operating Ratings indicate conditions for which the device is functional, but do not guarantee specific performance limits. For guaranteed specifications and test conditions, see the Electrical Characteristics. The guaranteed specifications apply only for the test conditions listed. Some performance characteristics may degrade when the device is not operated under the listed test conditions.

Note 2: Human body model, 1.5 kΩ in series with 100 pF.

Note 3: Functional test.

Note 4: The average temperature coefficient is defined as the maximum deviation of reference voltage, at all measured temperatures between the operating T_{Min} & T_{Max}, divided by (T_{Max} – T_{Min}). The measured temperatures ($T_{Measured}$) are –55°C, 25°C, & 125°C or ΔV_{Ref} / (T_{Max} – T_{Min})

Typical Performance Characteristics

Temperature Drift of 3 Representative Units

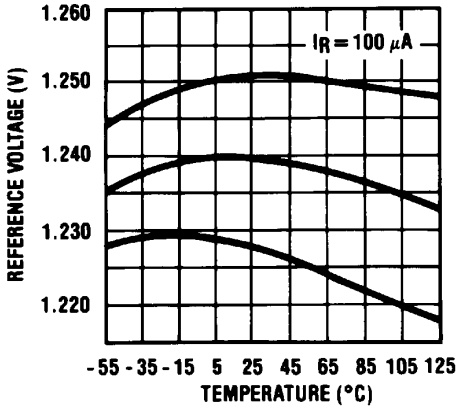

20156316

Feedback Current

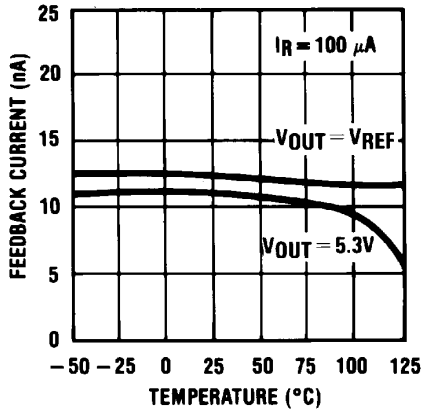

20156317

Minimum Operating Current

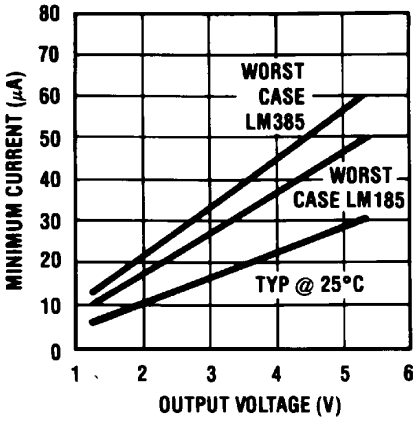

20156318

Reverse Characteristics

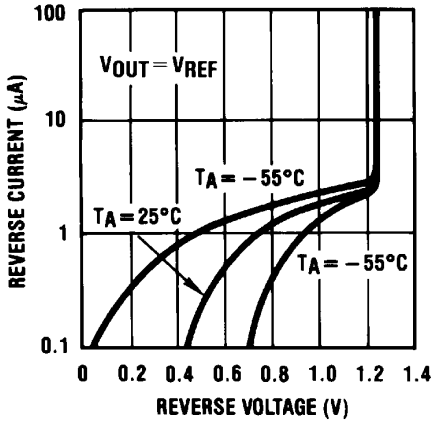

20156319

Reverse Characteristics

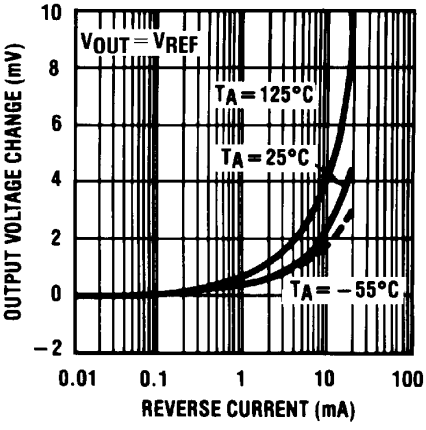

20156320

Forward Characteristics

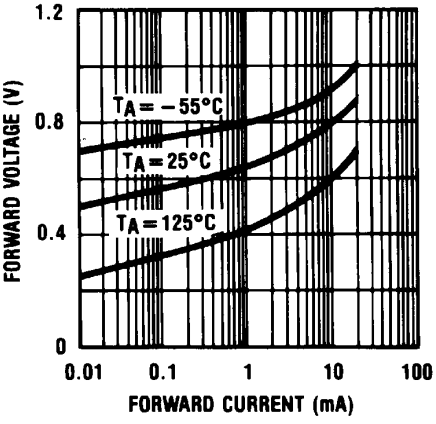

20156321

Output Noise Voltage

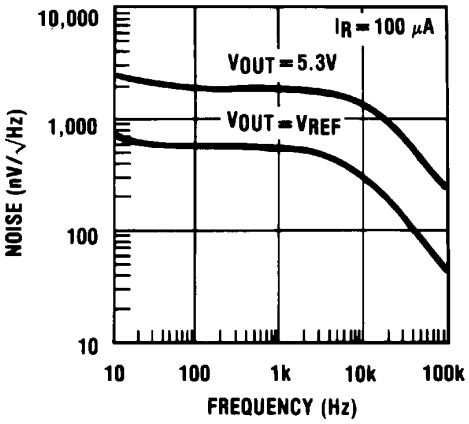

20156322

Dynamic Output Impedance

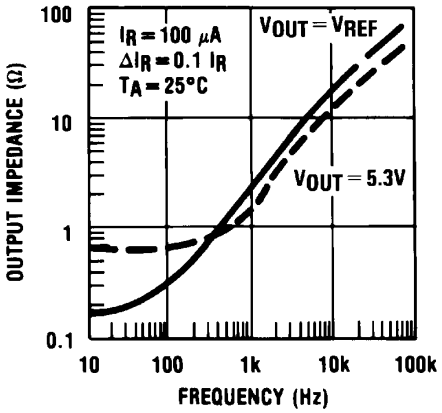

20156323

Response Time

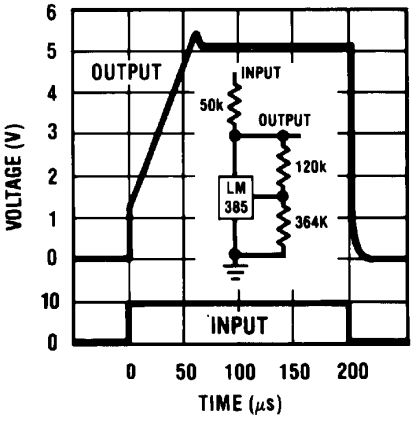

20156324

Temperature Coefficient Typical
LM185

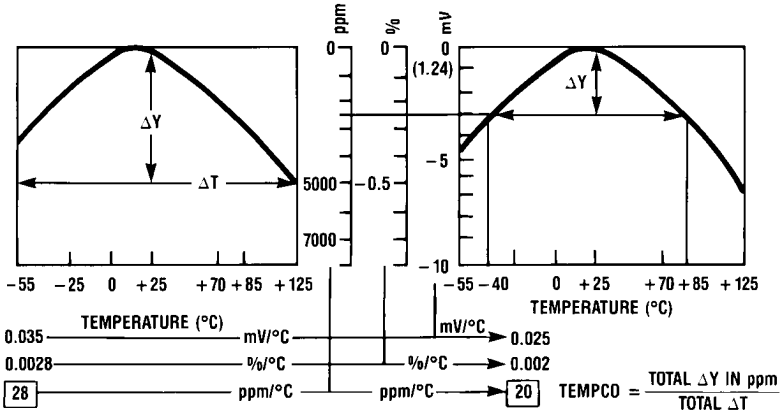

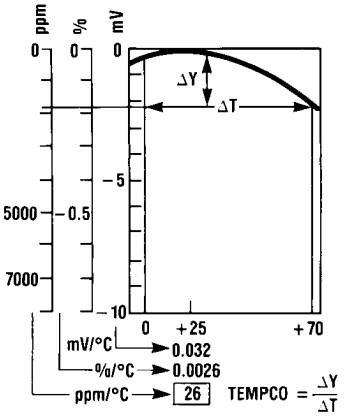

20156304

Typical Applications

Precision 10V Reference

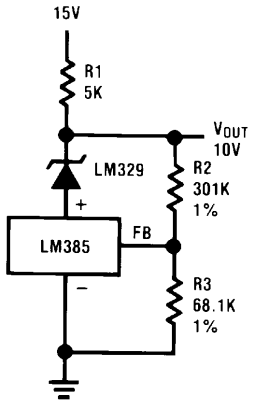

20156325

Low AC Noise Reference

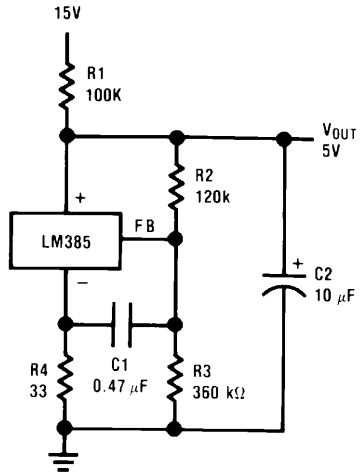

20156326

25V Low Current Shunt Regulator

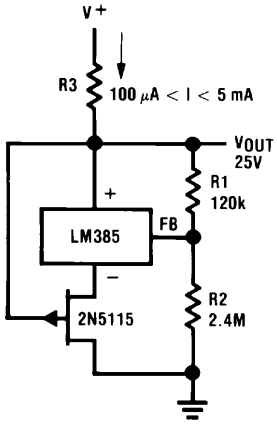

20156327

200 mA Shunt Regulator

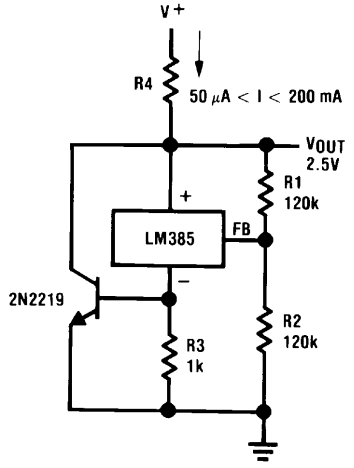

20156328

Series-Shunt 20 mA Regulator

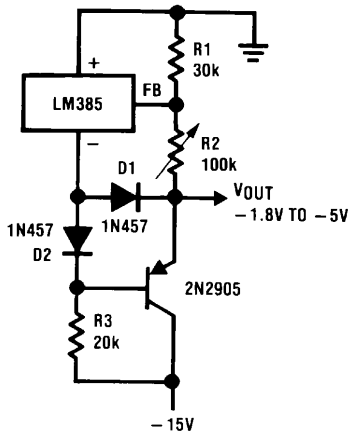

20156329

High Efficiency Low Power Regulator

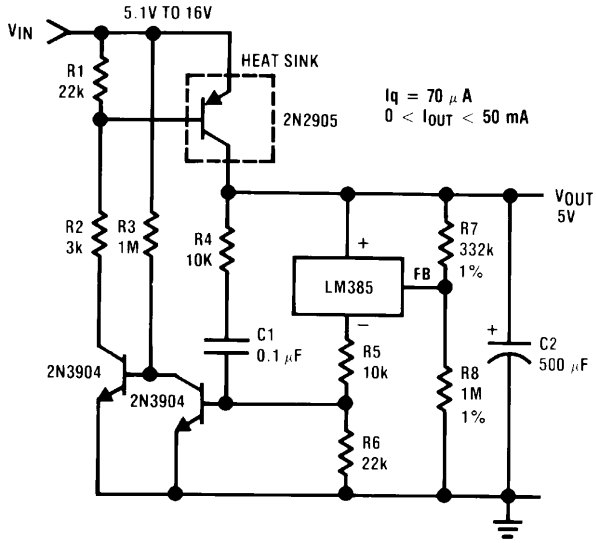

20156330

Voltage Level Detector

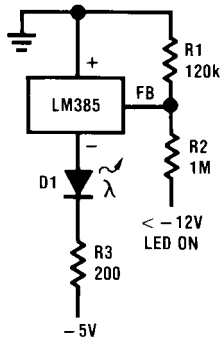

20156331

Voltage Level Detector

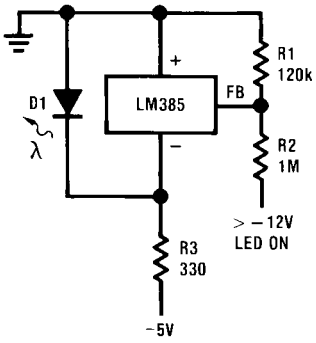

20156332

Fast Positive Clamp
2.4V + ΔV_{D1}

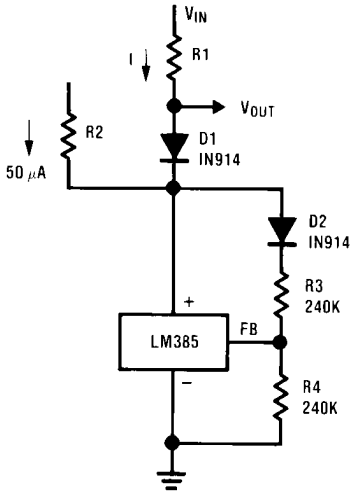

20156333

Bidirectional Clamp
±2.4V

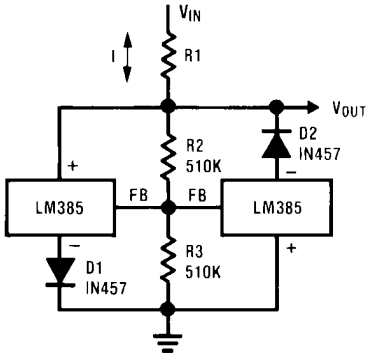

20156334

Bidirectional Adjustable Clamp ±1.8V to ±2.4V

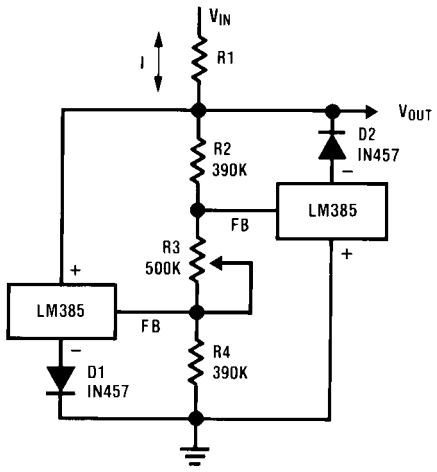

20156335

Bidirectional Adjustable Clamp ±2.4V to ±6V

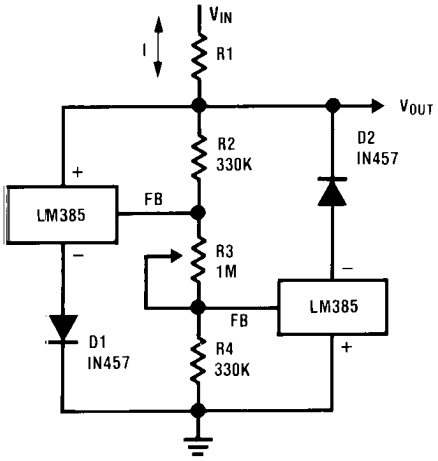

20156336

Simple Floating Current Detector

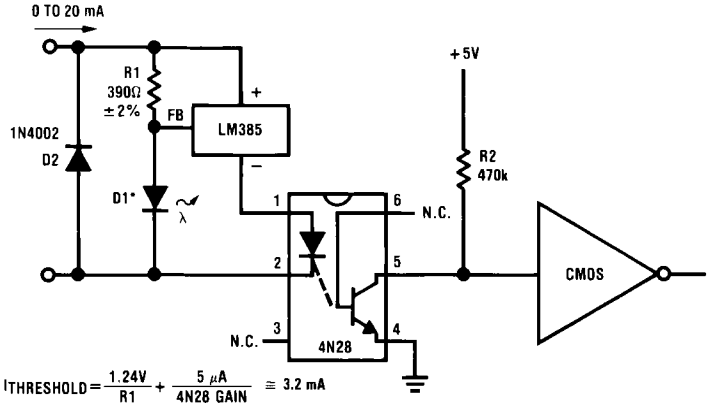

20156337

Current Source

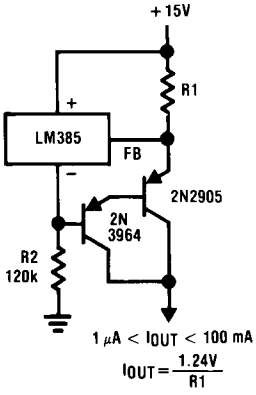

20156338

Precision Floating Current Detector

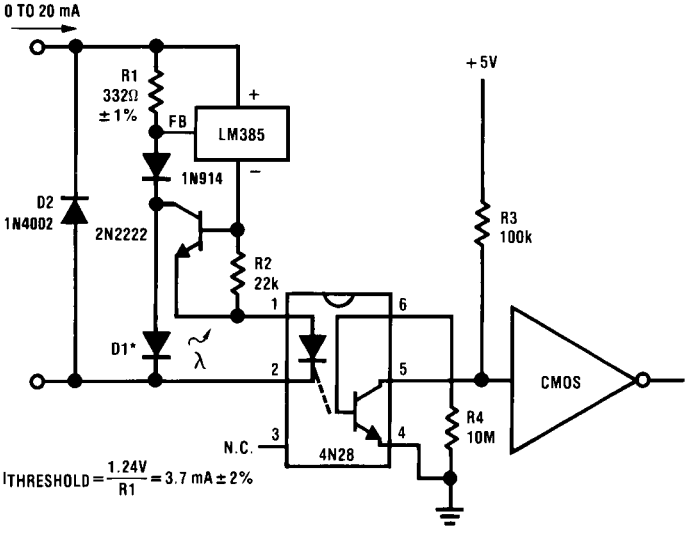

20156339

*D1 can be any LED, V_F=1.5V to 2.2V at 3 mA. D1 may act as an indicator. D1 will be on if $I_{THRESHOLD}$ falls below the threshold current, except with I=O.

Centigrade Thermometer, 10mV/°C

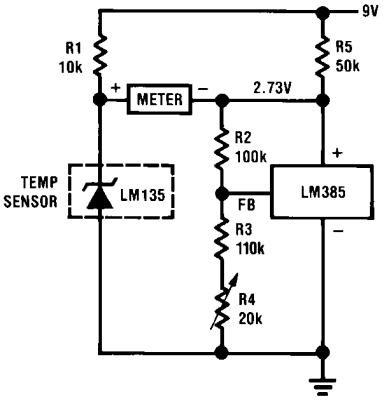

20156311

Freezer Alarm

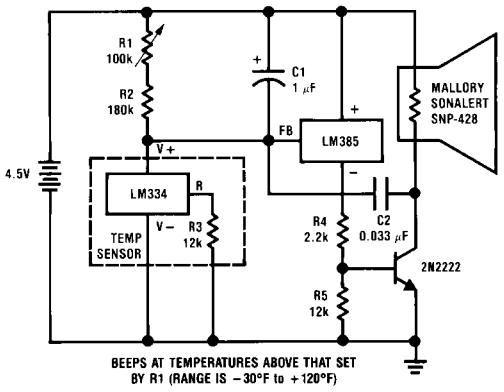

20156312

1.2V Reference

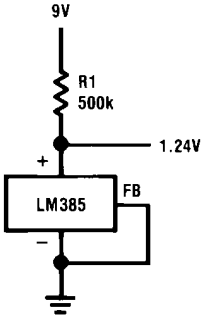

20156314

5.0V Reference

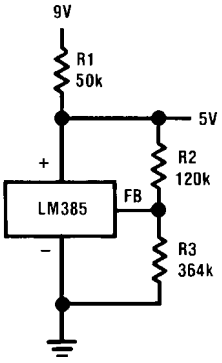

20156302

$$V_{OUT} = 1.24\left(\frac{R3}{R2} + 1\right)$$

Revision History Section

Released	Revision	Section	Originator	Changes
11/08/05	A	New Release, Corporate format	L. Lytle	2 MDS data sheets converted into one Corp. data sheet format. MNLM185B-X Rev 0B0 and MNLM185BY-X Rev 0B0 will be archived.
04/06/06	B	Ordering Information Table, WG Connection Diagram, Absolute Maximum Ratings Section, Physical Dimensions Section	R. Malone	Added NSID, Connection Diagram, Physical Dimension Dwg, Thermal Resistance and Package Weight for WG package. Revision A will be Archived.
06/12/08	C	LM185B and LM185BY Electrical Section	Larry McGee	Correct IC test, $V_R = V_{REF}$ condition, subgroup 1, 2, 3 moved limits to the maximum column. Revision B will be Archived.

Physical Dimensions inches (millimeters) unless otherwise noted

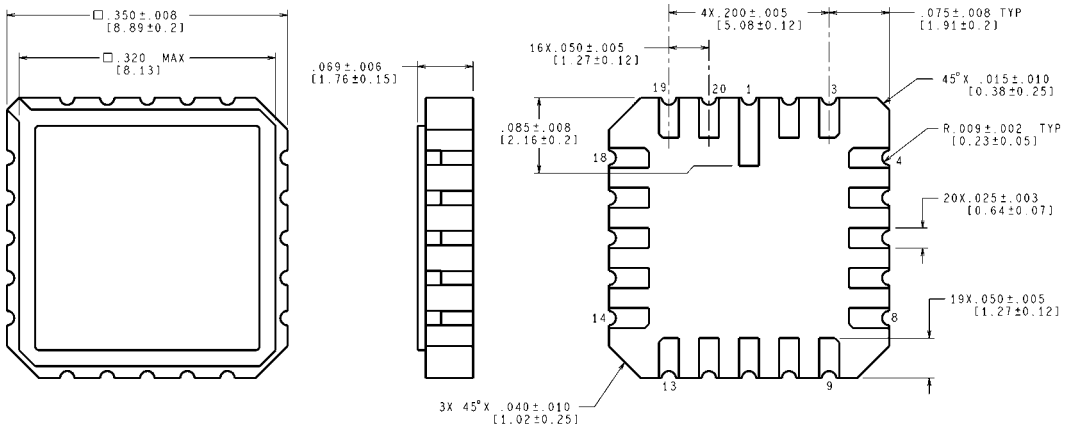

E20A (Rev F)

20-Leadless Chip Carrier (E)
NS Package Number E20A

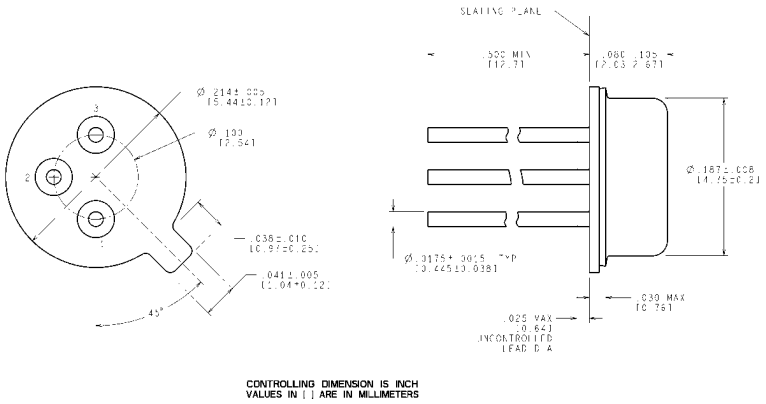

H03H (Rev F)

TO-46 Metal Can Package (H)
NS Package Number H03H

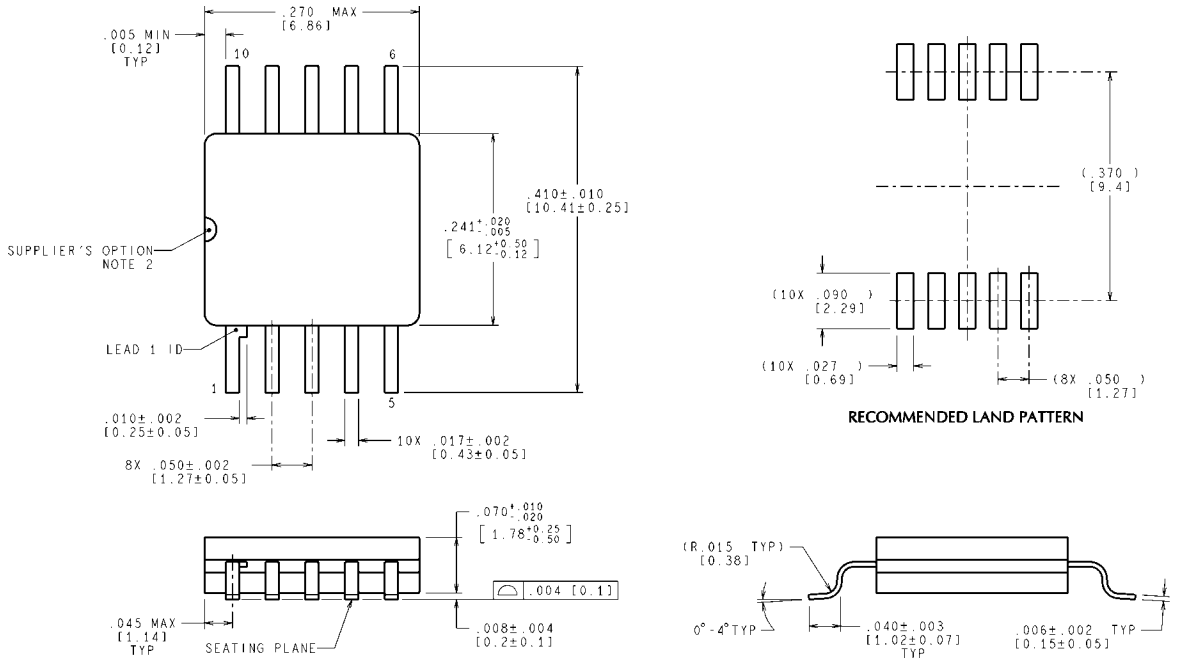

MIL-PRF-38535
CONFIGURATION CONTROL

CONTROLLING DIMENSION IS INCH
VALUES IN [ ] ARE MILLIMETERS
DIMENSIONS IN ( ) FOR REFERENCE ONLY

WG10A (Rev E)

Ceramic SOIC Package (WG)
NS Package Number WG10A

Notes

Notes

For more National Semiconductor product information and proven design tools, visit the following Web sites at:

Products		Design Support	
Amplifiers	www.national.com/amplifiers	WEBENCH	www.national.com/webench
Audio	www.national.com/audio	Analog University	www.national.com/AU
Clock Conditioners	www.national.com/timing	App Notes	www.national.com/appnotes
Data Converters	www.national.com/adc	Distributors	www.national.com/contacts
Displays	www.national.com/displays	Green Compliance	www.national.com/quality/green
Ethernet	www.national.com/ethernet	Packaging	www.national.com/packaging
Interface	www.national.com/interface	Quality and Reliability	www.national.com/quality
LVDS	www.national.com/lvds	Reference Designs	www.national.com/refdesigns
Power Management	www.national.com/power	Feedback	www.national.com/feedback
Switching Regulators	www.national.com/switchers		
LDOs	www.national.com/ldo		
LED Lighting	www.national.com/led		
PowerWise	www.national.com/powerwise		
Serial Digital Interface (SDI)	www.national.com/sdi		
Temperature Sensors	www.national.com/tempsensors		
Wireless (PLL/VCO)	www.national.com/wireless		

THE CONTENTS OF THIS DOCUMENT ARE PROVIDED IN CONNECTION WITH NATIONAL SEMICONDUCTOR CORPORATION ("NATIONAL") PRODUCTS. NATIONAL MAKES NO REPRESENTATIONS OR WARRANTIES WITH RESPECT TO THE ACCURACY OR COMPLETENESS OF THE CONTENTS OF THIS PUBLICATION AND RESERVES THE RIGHT TO MAKE CHANGES TO SPECIFICATIONS AND PRODUCT DESCRIPTIONS AT ANY TIME WITHOUT NOTICE. NO LICENSE, WHETHER EXPRESS, IMPLIED, ARISING BY ESTOPPEL OR OTHERWISE, TO ANY INTELLECTUAL PROPERTY RIGHTS IS GRANTED BY THIS DOCUMENT.

TESTING AND OTHER QUALITY CONTROLS ARE USED TO THE EXTENT NATIONAL DEEMS NECESSARY TO SUPPORT NATIONAL'S PRODUCT WARRANTY. EXCEPT WHERE MANDATED BY GOVERNMENT REQUIREMENTS, TESTING OF ALL PARAMETERS OF EACH PRODUCT IS NOT NECESSARILY PERFORMED. NATIONAL ASSUMES NO LIABILITY FOR APPLICATIONS ASSISTANCE OR BUYER PRODUCT DESIGN. BUYERS ARE RESPONSIBLE FOR THEIR PRODUCTS AND APPLICATIONS USING NATIONAL COMPONENTS. PRIOR TO USING OR DISTRIBUTING ANY PRODUCTS THAT INCLUDE NATIONAL COMPONENTS, BUYERS SHOULD PROVIDE ADEQUATE DESIGN, TESTING AND OPERATING SAFEGUARDS.

EXCEPT AS PROVIDED IN NATIONAL'S TERMS AND CONDITIONS OF SALE FOR SUCH PRODUCTS, NATIONAL ASSUMES NO LIABILITY WHATSOEVER, AND NATIONAL DISCLAIMS ANY EXPRESS OR IMPLIED WARRANTY RELATING TO THE SALE AND/OR USE OF NATIONAL PRODUCTS INCLUDING LIABILITY OR WARRANTIES RELATING TO FITNESS FOR A PARTICULAR PURPOSE, MERCHANTABILITY, OR INFRINGEMENT OF ANY PATENT, COPYRIGHT OR OTHER INTELLECTUAL PROPERTY RIGHT.

LIFE SUPPORT POLICY

NATIONAL'S PRODUCTS ARE NOT AUTHORIZED FOR USE AS CRITICAL COMPONENTS IN LIFE SUPPORT DEVICES OR SYSTEMS WITHOUT THE EXPRESS PRIOR WRITTEN APPROVAL OF THE CHIEF EXECUTIVE OFFICER AND GENERAL COUNSEL OF NATIONAL SEMICONDUCTOR CORPORATION. As used herein:

Life support devices or systems are devices which (a) are intended for surgical implant into the body, or (b) support or sustain life and whose failure to perform when properly used in accordance with instructions for use provided in the labeling can be reasonably expected to result in a significant injury to the user. A critical component is any component in a life support device or system whose failure to perform can be reasonably expected to cause the failure of the life support device or system or to affect its safety or effectiveness.

National Semiconductor and the National Semiconductor logo are registered trademarks of National Semiconductor Corporation. All other brand or product names may be trademarks or registered trademarks of their respective holders.

Copyright© 2008 National Semiconductor Corporation

For the most current product information visit us at www.national.com

National Semiconductor Americas Technical Support Center
Email: support@nsc.com
Tel: 1-800-272-9959

National Semiconductor Europe Technical Support Center
Email: europe.support@nsc.com
German Tel: +49 (0) 180 5010 771
English Tel: +44 (0) 870 850 4288

National Semiconductor Asia Pacific Technical Support Center
Email: ap.support@nsc.com

National Semiconductor Japan Technical Support Center
Email: jpn.feedback@nsc.com