FAIRCHILD SEMICONDUCTOR®

November 2001

IRFS340B

400V N-Channel MOSFET

General Description

These N-Channel enhancement mode power field effect transistors are produced using Fairchild's proprietary, planar, DMOS technology.
This advanced technology has been especially tailored to minimize on-state resistance, provide superior switching performance, and withstand high energy pulse in the avalanche and commutation mode. These devices are well suited for high efficiency switch mode power supplies and electronic lamp ballasts based on half bridge.

Features

- 8A, 400V, $R_{DS(on)}$ = 0.54Ω @V_{GS} = 10 V
- Low gate charge (typical 41 nC)
- Low Crss (typical 35 pF)
- Fast switching
- 100% avalanche tested
- Improved dv/dt capability

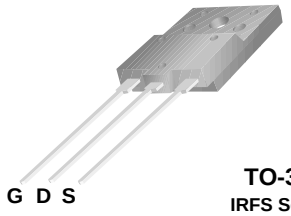

TO-3PF
IRFS Series

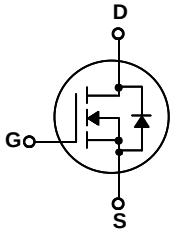

Absolute Maximum Ratings

T_C = 25°C unless otherwise noted

Symbol	Parameter		IRFS340B	Units
V_{DSS}	Drain-Source Voltage		400	V
I_D	Drain Current - Continuous (T_C = 25°C)		8.0	A
	- Continuous (T_C = 100°C)		5.1	A
I_{DM}	Drain Current - Pulsed	(Note 1)	32	A
V_{GSS}	Gate-Source Voltage		± 30	V
E_{AS}	Single Pulsed Avalanche Energy	(Note 2)	450	mJ
I_{AR}	Avalanche Current	(Note 1)	8.0	A
E_{AR}	Repetitive Avalanche Energy	(Note 1)	8.5	mJ
dv/dt	Peak Diode Recovery dv/dt	(Note 3)	5.5	V/ns
P_D	Power Dissipation (T_C = 25°C)		85	W
	- Derate above 25°C		0.68	W/°C
T_J, T_{STG}	Operating and Storage Temperature Range		-55 to +150	°C
T_L	Maximum lead temperature for soldering purposes, 1/8" from case for 5 seconds		300	°C

Thermal Characteristics

Symbol	Parameter	Typ	Max	Units
$R_{\theta JC}$	Thermal Resistance, Junction-to-Case	--	1.46	°C/W
$R_{\theta JA}$	Thermal Resistance, Junction-to-Ambient	--	40	°C/W

©2001 Fairchild Semiconductor Corporation

Electrical Characteristics

T_C = 25°C unless otherwise noted

Symbol	Parameter	Test Conditions	Min	Typ	Max	Units
Off Characteristics						
BV_{DSS}	Drain-Source Breakdown Voltage	V_{GS} = 0 V, I_D = 250 μA	400	--	--	V
ΔBV_{DSS} / ΔT_J	Breakdown Voltage Temperature Coefficient	I_D = 250 μA, Referenced to 25°C	--	0.4	--	V/°C
I_{DSS}	Zero Gate Voltage Drain Current	V_{DS} = 400 V, V_{GS} = 0 V	--	--	10	μA
		V_{DS} = 320 V, T_C = 125°C	--	--	100	μA
I_{GSSF}	Gate-Body Leakage Current, Forward	V_{GS} = 30 V, V_{DS} = 0 V	--	--	100	nA
I_{GSSR}	Gate-Body Leakage Current, Reverse	V_{GS} = -30 V, V_{DS} = 0 V	--	--	-100	nA
On Characteristics						
$V_{GS(th)}$	Gate Threshold Voltage	V_{DS} = V_{GS}, I_D = 250 μA	2.0	--	4.0	V
$R_{DS(on)}$	Static Drain-Source On-Resistance	V_{GS} = 10 V, I_D = 4.0 A	--	0.43	0.54	Ω
g_{FS}	Forward Transconductance	V_{DS} = 40 V, I_D = 4.0 A (Note 4)	--	8.2	--	S
Dynamic Characteristics						
C_{iss}	Input Capacitance	V_{DS} = 25 V, V_{GS} = 0 V, f = 1.0 MHz	--	1400	1800	pF
C_{oss}	Output Capacitance		--	150	195	pF
C_{rss}	Reverse Transfer Capacitance		--	35	45	pF
Switching Characteristics						
$t_{d(on)}$	Turn-On Delay Time	V_{DD} = 200 V, I_D = 10 A, R_G = 25 Ω (Note 4, 5)	--	20	50	ns
t_r	Turn-On Rise Time		--	80	170	ns
$t_{d(off)}$	Turn-Off Delay Time		--	125	260	ns
t_f	Turn-Off Fall Time		--	85	180	ns
Q_g	Total Gate Charge	V_{DS} = 320 V, I_D = 10 A, V_{GS} = 10 V (Note 4, 5)	--	41	53	nC
Q_{gs}	Gate-Source Charge		--	7	--	nC
Q_{gd}	Gate-Drain Charge		--	17	--	nC
Drain-Source Diode Characteristics and Maximum Ratings						
I_S	Maximum Continuous Drain-Source Diode Forward Current		--	--	8.0	A
I_{SM}	Maximum Pulsed Drain-Source Diode Forward Current		--	--	32	A
V_{SD}	Drain-Source Diode Forward Voltage	V_{GS} = 0 V, I_S = 8.0 A	--	--	1.5	V
t_{rr}	Reverse Recovery Time	V_{GS} = 0 V, I_S = 10 A, dI_F / dt = 100 A/μs (Note 4)	--	330	--	ns
Q_{rr}	Reverse Recovery Charge		--	3.57	--	μC

Notes:
1. Repetitive Rating : Pulse width limited by maximum junction temperature
2. L = 12.3mH, I_{AS} = 8.0A, V_{DD} = 50V, R_G = 25 Ω, Starting T_J = 25°C
3. $I_{SD} \leq$ 10A, di/dt $\leq$ 300A/μs, $V_{DD} \leq BV_{DSS}$, Starting T_J = 25°C
4. Pulse Test : Pulse width $\leq$ 300μs, Duty cycle $\leq$ 2%
5. Essentially independent of operating temperature

©2001 Fairchild Semiconductor Corporation

Typical Characteristics

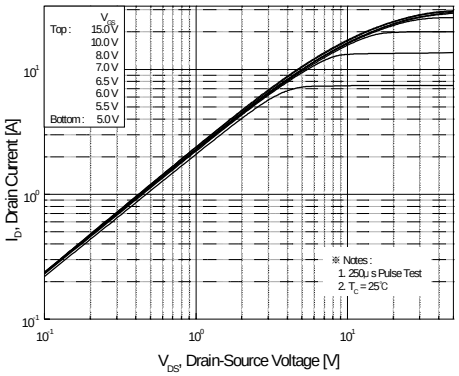

Figure 1. On-Region Characteristics

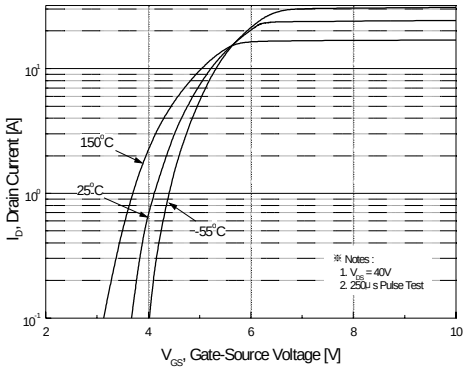

Figure 2. Transfer Characteristics

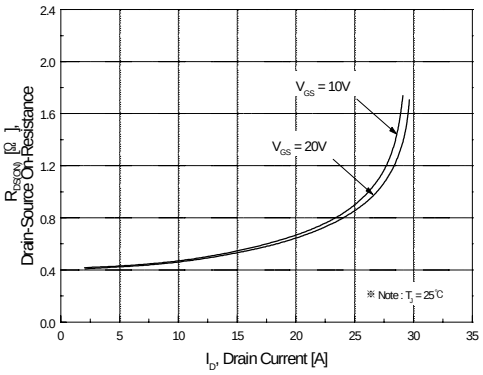

Figure 3. On-Resistance Variation vs Drain Current and Gate Voltage

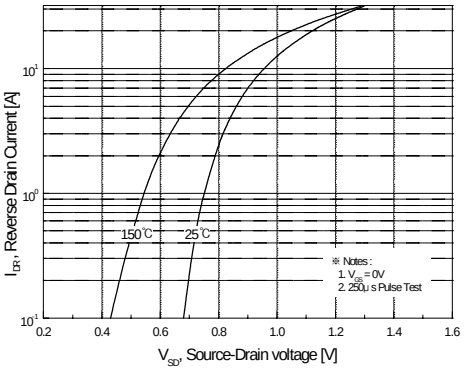

Figure 4. Body Diode Forward Voltage Variation with Source Current and Temperature

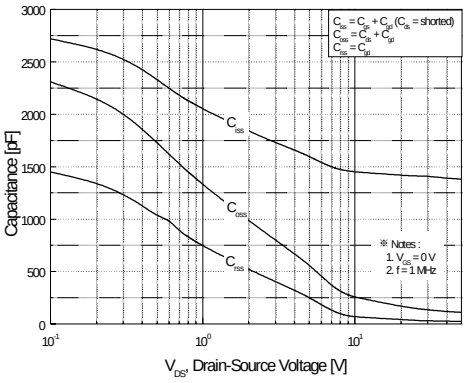

Figure 5. Capacitance Characteristics

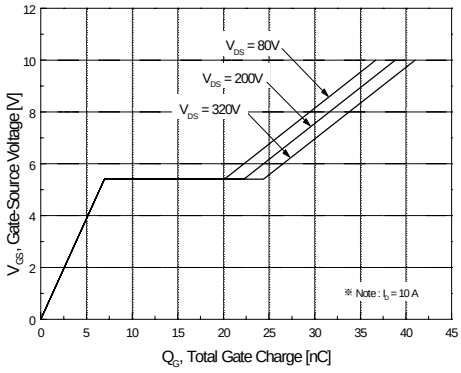

Figure 6. Gate Charge Characteristics

©2001 Fairchild Semiconductor Corporation

Typical Characteristics (Continued)

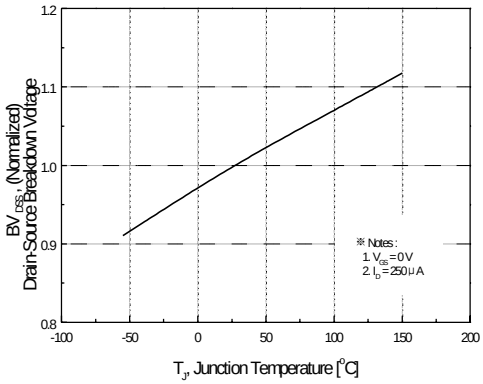

Figure 7. Breakdown Voltage Variation vs Temperature

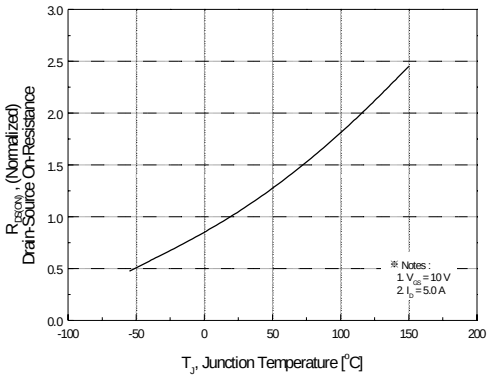

Figure 8. On-Resistance Variation vs Temperature

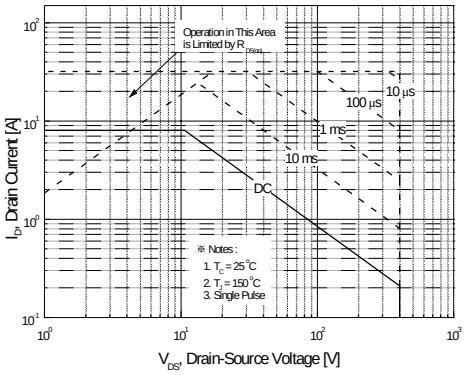

Figure 9. Maximum Safe Operating Area

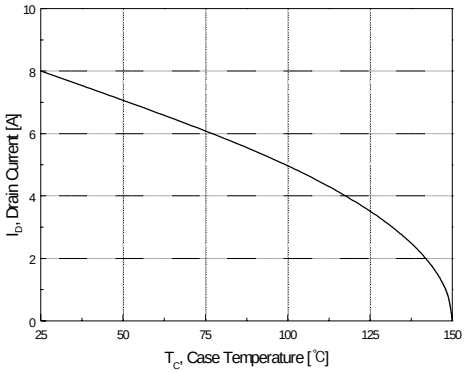

Figure 10. Maximum Drain Current vs Case Temperature

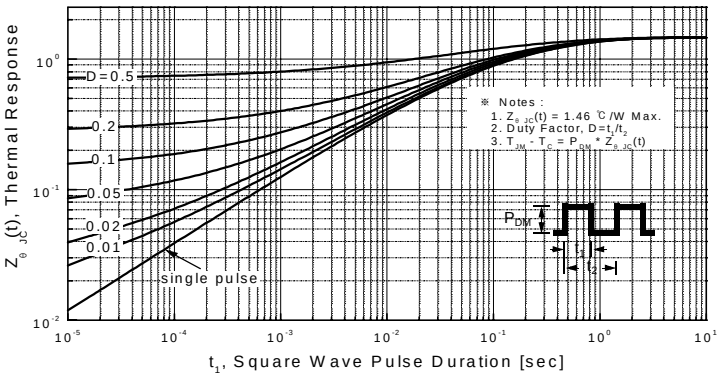

Figure 11. Transient Thermal Response Curve

©2001 Fairchild Semiconductor Corporation

Gate Charge Test Circuit & Waveform

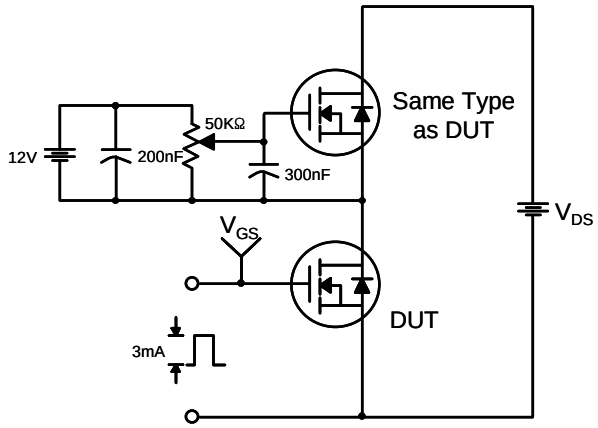

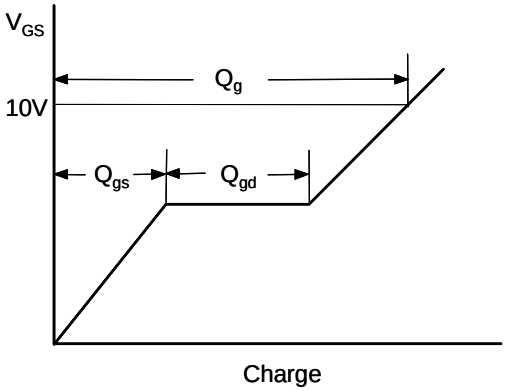

Resistive Switching Test Circuit & Waveforms

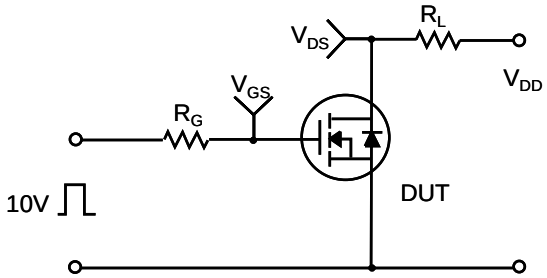

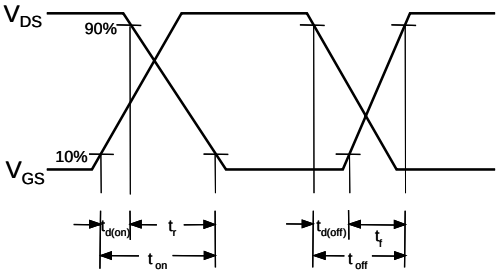

Unclamped Inductive Switching Test Circuit & Waveforms

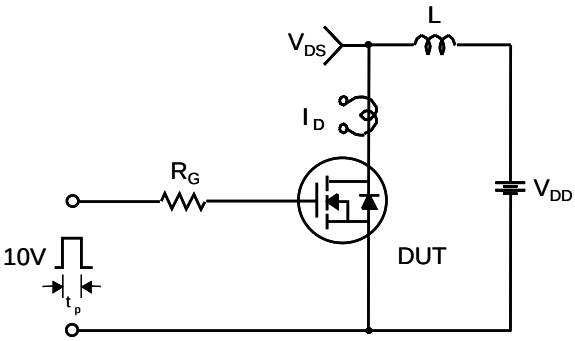

$$E_{AS} = \frac{1}{2} L I_{AS}^2 \frac{BV_{DSS}}{BV_{DSS} - V_{DD}}$$

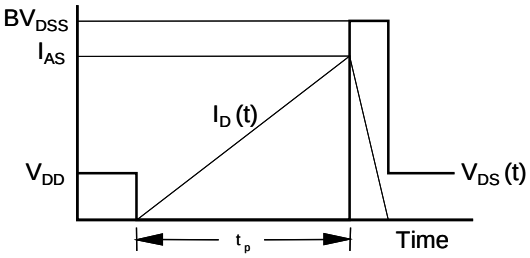

©2001 Fairchild Semiconductor Corporation

Peak Diode Recovery dv/dt Test Circuit & Waveforms

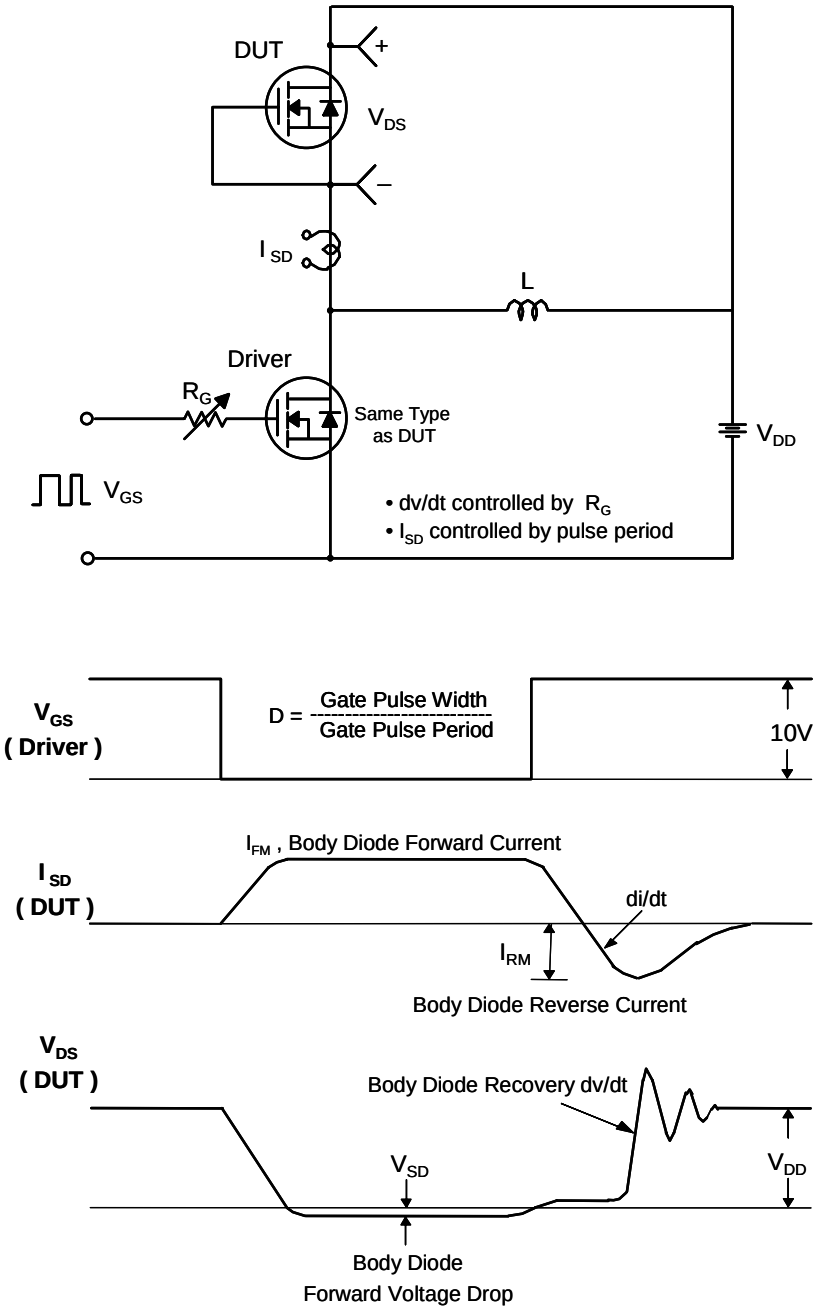

©2001 Fairchild Semiconductor Corporation

Package Dimensions

TO-3PF

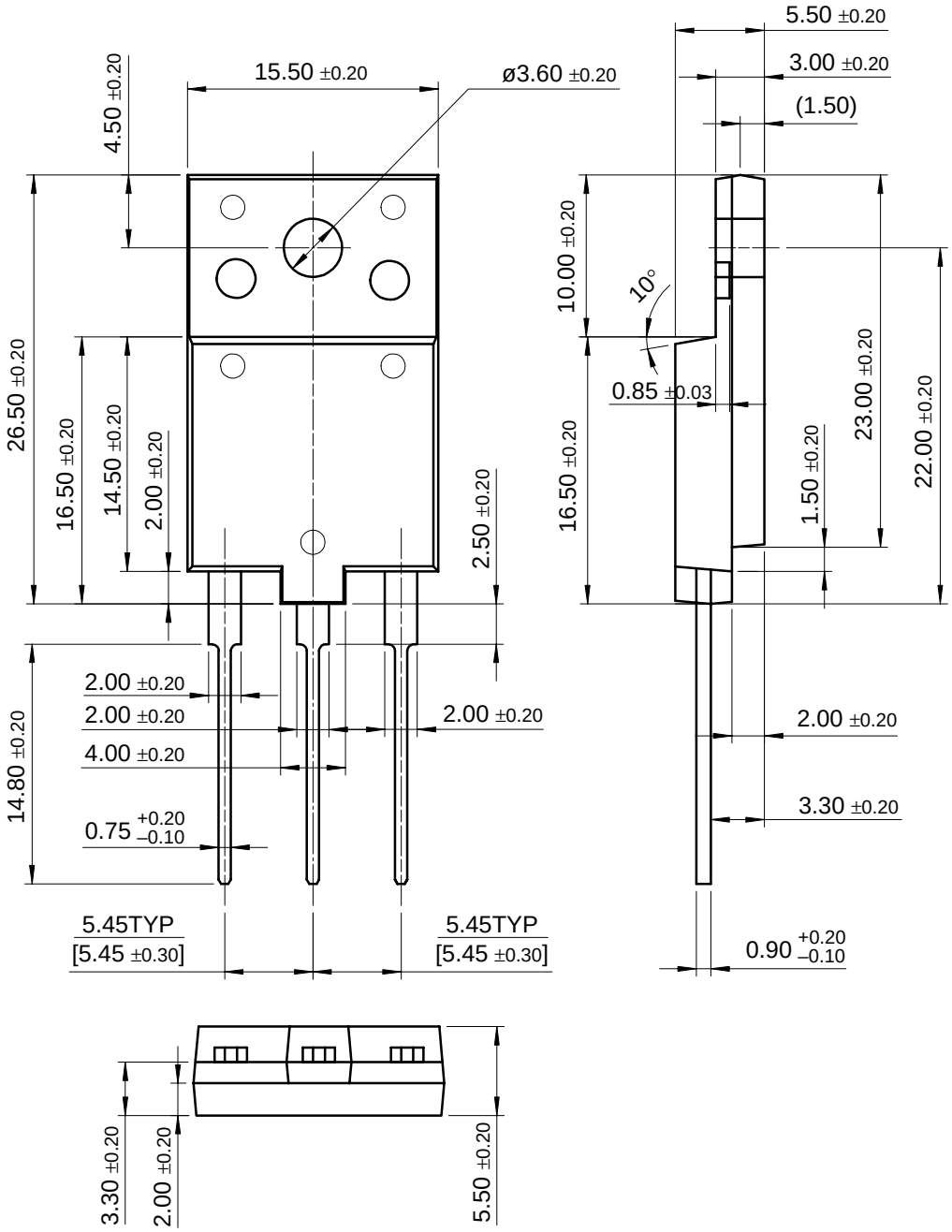

Dimensions in Millimeters

©2001 Fairchild Semiconductor Corporation

TRADEMARKS

The following are registered and unregistered trademarks Fairchild Semiconductor owns or is authorized to use and is not intended to be an exhaustive list of all such trademarks.

ACEx™	FAST®	OPTOLOGIC™	SMART START™	VCX™
Bottomless™	FASTr™	OPTOPLANAR™	STAR*POWER™	
CoolFET™	FRFET™	PACMAN™	Stealth™	
CROSSVOLT™	GlobalOptoisolator™	POP™	SuperSOT™-3	
DenseTrench™	GTO™	Power247™	SuperSOT™-6	
DOME™	HiSeC™	PowerTrench®	SuperSOT™-8	
EcoSPARK™	ISOPLANAR™	QFET™	SyncFET™	
E^2CMOS™	LittleFET™	QS™	TruTranslation™	
EnSigna™	MicroFET™	QT Optoelectronics™	TinyLogic™	
FACT™	MicroPak™	Quiet Series™	UHC™	
FACT Quiet Series™	MICROWIRE™	SLIENT SWITCHER®	UltraFET®	

STAR*POWER is used under license

DISCLAIMER

FAIRCHILD SEMICONDUCTOR RESERVES THE RIGHT TO MAKE CHANGES WITHOUT FURTHER NOTICE TO ANY PRODUCTS HEREIN TO IMPROVE RELIABILITY, FUNCTION OR DESIGN. FAIRCHILD DOES NOT ASSUME ANY LIABILITY ARISING OUT OF THE APPLICATION OR USE OF ANY PRODUCT OR CIRCUIT DESCRIBED HEREIN; NEITHER DOES IT CONVEY ANY LICENSE UNDER ITS PATENT RIGHTS, NOR THE RIGHTS OF OTHERS.

LIFE SUPPORT POLICY

FAIRCHILD'S PRODUCTS ARE NOT AUTHORIZED FOR USE AS CRITICAL COMPONENTS IN LIFE SUPPORT DEVICES OR SYSTEMS WITHOUT THE EXPRESS WRITTEN APPROVAL OF FAIRCHILD SEMICONDUCTOR CORPORATION.

As used herein:

1. Life support devices or systems are devices or systems which, (a) are intended for surgical implant into the body, or (b) support or sustain life, or (c) whose failure to perform when properly used in accordance with instructions for use provided in the labeling, can be reasonably expected to result in significant injury to the user.

2. A critical component is any component of a life support device or system whose failure to perform can be reasonably expected to cause the failure of the life support device or system, or to affect its safety or effectiveness.

PRODUCT STATUS DEFINITIONS

Definition of Terms

Datasheet Identification	Product Status	Definition
Advance Information	Formative or In Design	This datasheet contains the design specifications for product development. Specifications may change in any manner without notice.
Preliminary	First Production	This datasheet contains preliminary data, and supplementary data will be published at a later date. Fairchild Semiconductor reserves the right to make changes at any time without notice in order to improve design.
No Identification Needed	Full Production	This datasheet contains final specifications. Fairchild Semiconductor reserves the right to make changes at any time without notice in order to improve design.
Obsolete	Not In Production	This datasheet contains specifications on a product that has been discontinued by Fairchild semiconductor. The datasheet is printed for reference information only.

©2001 Fairchild Semiconductor Corporation

Littlediode supplies new, hard to find or obsolete electronic components and semiconductors all over the world.

With over two million different components listed you are sure to find the part you need.

Feel free to visit us today at our online store:

LittleDiode.com

Looking forward to providing you with the best possible service.