# AN3592K, AN3592S

## Jumping Correction ICs for PAL VCR

### ■ Overview

The AN3592K and AN3592S are ICs for correcting a waveform distortion generated at LP mode special playback for PAL VCRs.

### ■ Features

- The AN3592K and AN3592S have the following functions : Video signal 0.5H discontinuous point detection circuit. Chroma signal phase dislocation detection/correction circuit
- Supply voltage : 5V.

AN3592K

Unit : mm

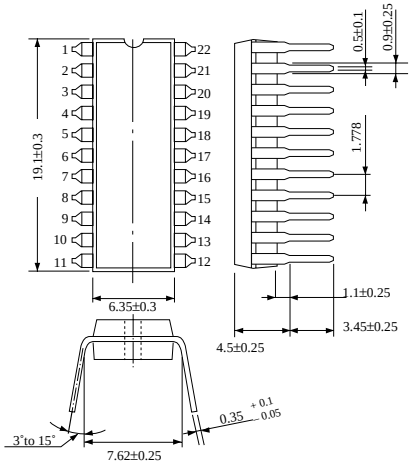


22-Pin Shrunk DIL Plastic Package (SDIP022-P-0300A)

AN3592S

Unit : mm

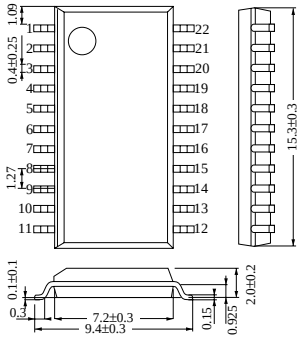


22-Pin PANAFLAT Package (SOP022-P-0375)

### ■ Block Diagram

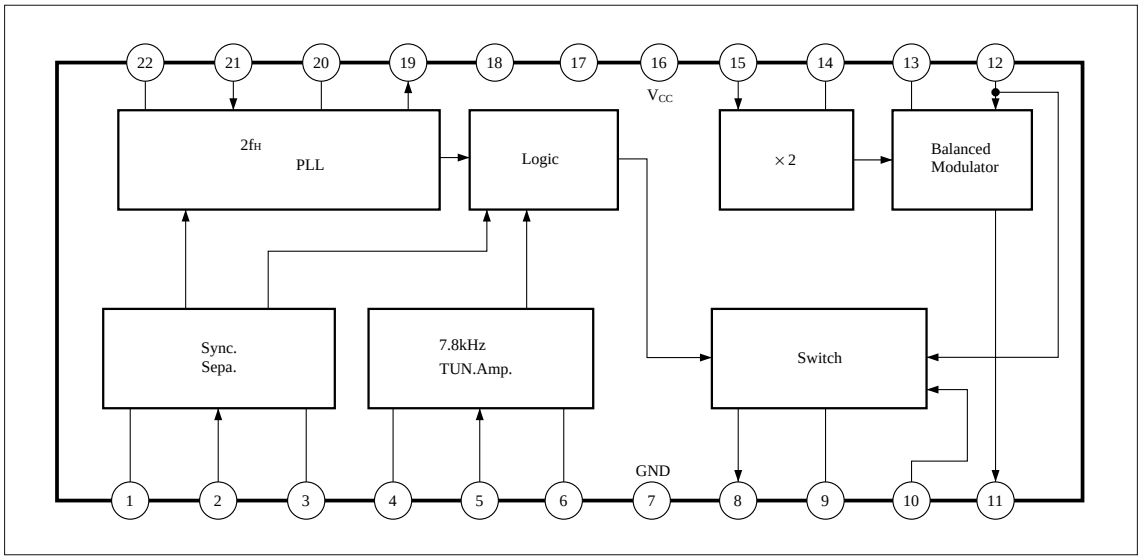

## ■ Pin Descriptions

| Pin No. | Pin name | Pin No. | Pin name |
|---|---|---|---|
| 1 | V. killer | 12 | Chroma input |
| 2 | Sync. sepa. input | 13 | B.M. bias |
| 3 | Sync. sepa. filter | 14 | 8.86MHz tuned coil |
| 4 | 7.8kHz tuned coil | 15 | 4.43MHz input |
| 5 | APC error input | 16 | $V_{CC}$ |
| 6 | APC error bias | 17 | 1/2H M.M. |
| 7 | GND | 18 | 1/2H jump output |
| 8 | Chroma output | 19 | P.C. output |
| 9 | CTL. input | 20 | VCO cap. |
| 10 | LPF input | 21 | VCO input |
| 11 | LPF output | 22 | VCO resistor |

## ■ Absolute Maximum Ratings (Ta =25˚C)

| Parameter | | Symbol | Rating | Unit |
|---|---|---|---|---|
| Supply voltage | | $V_{CC}$ | 6.0 | V |
| Power dissipation | | $P_D$ | 200 | mW |
| Operating ambient temperature | | $T_{opr}$ | –20 to + 75 | ˚C |
| Storage temperature | AN3592K | $T_{stg}$ | –55 to + 150 | ˚C |
| | AN3592S | | –55 to + 125 | |

## ■ Electrical Characteristics ($V_{CC}$=5V, Ta=25˚C)

| Parameter | Symbol | Condition | min | typ | max | Unit |
|---|---|---|---|---|---|---|
| Supply current | $I_{CC}$ | | 13 | 18.5 | 24 | mA |
| Direct output voltage | $V_{OD}$ | Chroma 300m$V_{P-P}$ direct mode | 440 | 510 | 580 | m$V_{P-P}$ |
| Inverted/direct output voltage ratio | $R_{ID}$ | 4.43MHz input 250m$V_{P-P}$ | – 0.5 | +1 | +2.5 | dB |
| Inversion mode leak | $V_{O1L}$ | Chroma 300m$V_{P-P}$ inversion mode | 0 | 10 | 55 | m$V_{P-P}$ |
| 2nd harmonics spurious | $V_{O2L}$ | Chroma input 4.43MHz, input 300m$V_{P-P}$ | 0 | 5 | 15 | m$V_{P-P}$ |
| Switch amp. leak | $V_{OSL}$ | Pin10 input 300m$V_{P-P}$ direct mode | 0 | 1.5 | 5 | m$V_{P-P}$ |
| SYNC. SEP. minimum input | $V_{SSP}$ | APL 0% | — | 150 | 200 | m$V_{P-P}$ |
| $2_{fH}$ PLL ref. oscillation voltage | $V_{OSC}$ | Oscillation freq. 15.6kHz | 2 | 2.4 | 2.8 | V |
| $2_{fH}$ PLL pull-in rage | $f_P$ | | 15.1 | 15.6 | 16.1 | kHz |
| $2_{fH}$ PLL VCO control sensitivity | $S_{VCO}$ | | 9.2 | 11.5 | 15.0 | Hz/mV |
| APC error input minimum level | $V_{APC}$ | | — | 25 | 40 | m$V_{P-P}$ |
| 1/2H.M.M. threshold value | $V_{MTH}$ | | 2.2 | 2.5 | 2.8 | V |
| Direct mode hold voltage | $V_{CTL-D}$ | | 0 | — | 0.7 | V |
| Inversion mode holding voltage | $V_{CTL-I}$ | | 2 | — | 3.5 | V |
| Active mode hold voltage | $V_{CTL-A}$ | | 4.7 | — | 5 | V |

## ■ Application Circuit

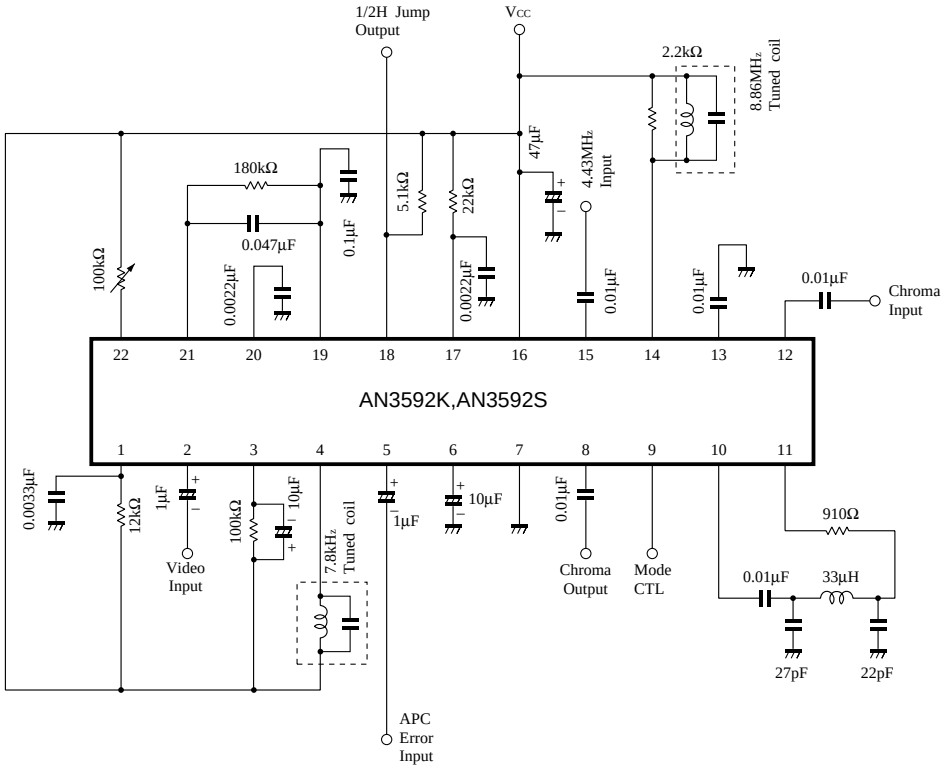

Littlediode supplies new, hard to find or obsolete electronic components and semiconductors all over the world.

With over two million different components listed you are sure to find the part you need.

Feel free to visit us today at our online store:

**LittleDiode.com**

Looking forward to providing you with the best possible service.