SIPMOS ® Power Transistor

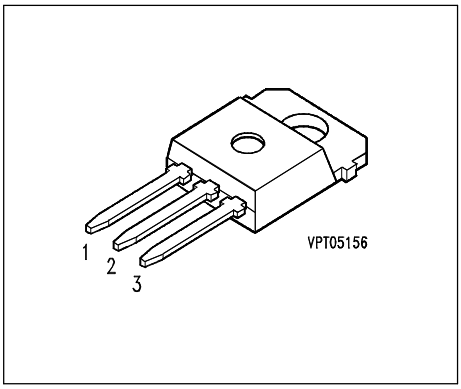

- N channel
- Enhancement mode
- Avalanche-rated

Pin 1	Pin 2	Pin 3
G	D	S

Type	V_{DS}	I_D	$R_{DS(on)}$	Package	Ordering Code
BUZ 349	100 V	32 A	0.06 Ω	TO-218 AA	C67078-S3113-A2

Maximum Ratings

Parameter	Symbol	Values	Unit
Continuous drain current T_C = 27 °C	I_D	32	A
Pulsed drain current T_C = 25 °C	I_{Dpuls}	128	
Avalanche current,limited by T_{jmax}	I_{AR}	32	
Avalanche energy,periodic limited by T_{jmax}	E_{AR}	15	mJ
Avalanche energy, single pulse I_D = 32 A, V_{DD} = 25 V, R_{GS} = 25 Ω L = 322 µH, T_j = 25 °C	E_{AS}	220	
Gate source voltage	V_{GS}	± 20	V
Power dissipation T_C = 25 °C	P_{tot}	125	W
Operating temperature	T_j	-55 ... + 150	°C
Storage temperature	T_{stg}	-55 ... + 150	
Thermal resistance, chip case	R_{thJC}	≤ 1	K/W
Thermal resistance, chip to ambient	R_{thJA}	75	
DIN humidity category, DIN 40 040		E	
IEC climatic category, DIN IEC 68-1		55 / 150 / 56	

Electrical Characteristics, at T_j = 25°C, unless otherwise specified

Parameter	Symbol	Values			Unit
		min.	typ.	max.	
Static Characteristics					
Drain- source breakdown voltage V_{GS} = 0 V, I_D = 0.25 mA, T_j = 25 °C	$V_{(BR)DSS}$	100	-	-	V
Gate threshold voltage V_{GS}=V_{DS}, I_D = 1 mA	$V_{GS(th)}$	2.1	3	4	
Zero gate voltage drain current V_{DS} = 100 V, V_{GS} = 0 V, T_j = 25 °C V_{DS} = 100 V, V_{GS} = 0 V, T_j = 125 °C	I_{DSS}	- -	0.1 10	1 100	µA
Gate-source leakage current V_{GS} = 20 V, V_{DS} = 0 V	I_{GSS}	-	10	100	nA
Drain-Source on-resistance V_{GS} = 10 V, I_D = 21 A	$R_{DS(on)}$	-	0.05	0.06	Ω

Electrical Characteristics, at T_j = 25°C, unless otherwise specified

Parameter	Symbol	Values			Unit
		min.	typ.	max.	
Dynamic Characteristics					
Transconductance $V_{DS} \geq 2 * I_D * R_{DS(on)max}$, I_D = 21 A	g_{fs}	10	17	-	S
Input capacitance V_{GS} = 0 V, V_{DS} = 25 V, f = 1 MHz	C_{iss}	-	1400	1850	pF
Output capacitance V_{GS} = 0 V, V_{DS} = 25 V, f = 1 MHz	C_{oss}	-	450	700	
Reverse transfer capacitance V_{GS} = 0 V, V_{DS} = 25 V, f = 1 MHz	C_{rss}	-	230	370	
Turn-on delay time V_{DD} = 30 V, V_{GS} = 10 V, I_D = 3 A R_{GS} = 50 Ω	$t_{d(on)}$	-	20	30	ns
Rise time V_{DD} = 30 V, V_{GS} = 10 V, I_D = 3 A R_{GS} = 50 Ω	t_r	-	80	120	
Turn-off delay time V_{DD} = 30 V, V_{GS} = 10 V, I_D = 3 A R_{GS} = 50 Ω	$t_{d(off)}$	-	230	300	
Fall time V_{DD} = 30 V, V_{GS} = 10 V, I_D = 3 A R_{GS} = 50 Ω	t_f	-	120	160	

Electrical Characteristics, at T_j = 25°C, unless otherwise specified

Parameter	Symbol	Values			Unit
		min.	typ.	max.	
Reverse Diode					
Inverse diode continuous forward current T_C = 25 °C	I_S	-	-	32	A
Inverse diode direct current,pulsed T_C = 25 °C	I_{SM}	-	-	128	
Inverse diode forward voltage V_{GS} = 0 V, I_F = 64 A	V_{SD}	-	1.4	1.7	V
Reverse recovery time V_R = 30 V, I_F=I_S, di_F/dt = 100 A/µs	t_{rr}	-	130	-	ns
Reverse recovery charge V_R = 30 V, I_F=I_S, di_F/dt = 100 A/µs	Q_{rr}	-	0.7	-	µC

Power dissipation

$P_{tot} = f(T_C)$

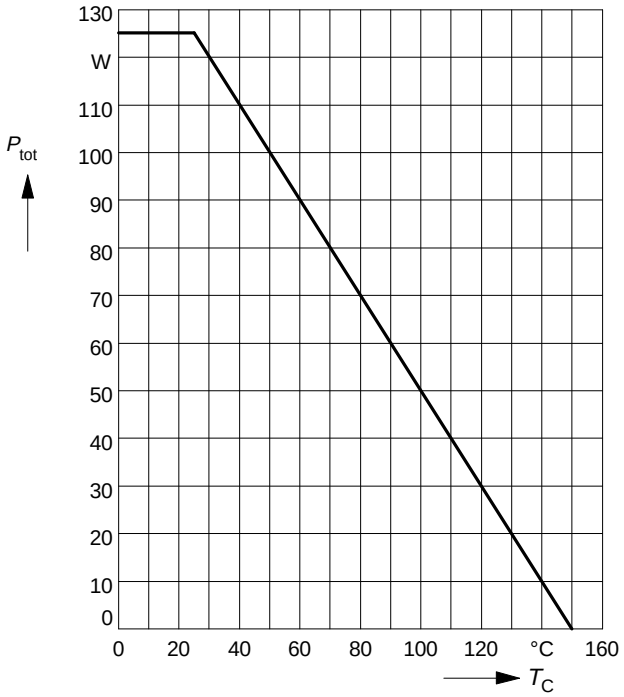

Drain current

$I_D = f(T_C)$

parameter: $V_{GS} \geq 10$ V

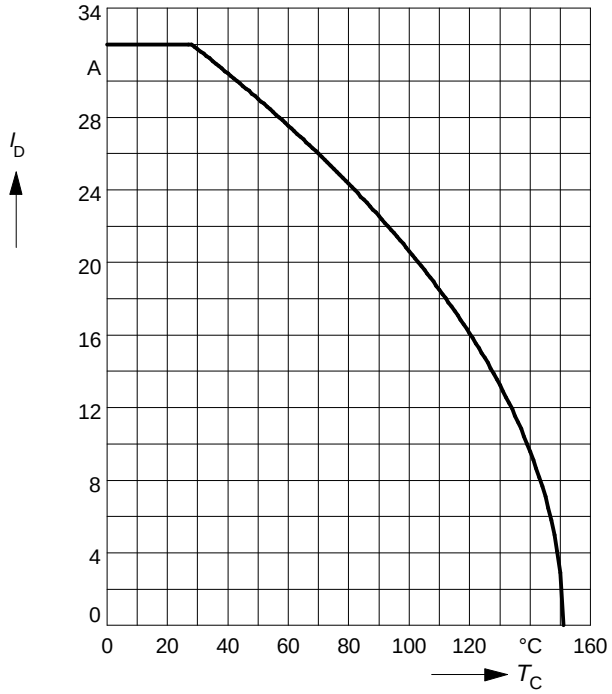

Safe operating area

$I_D = f(V_{DS})$

parameter: $D = 0.01$, $T_C = 25°C$

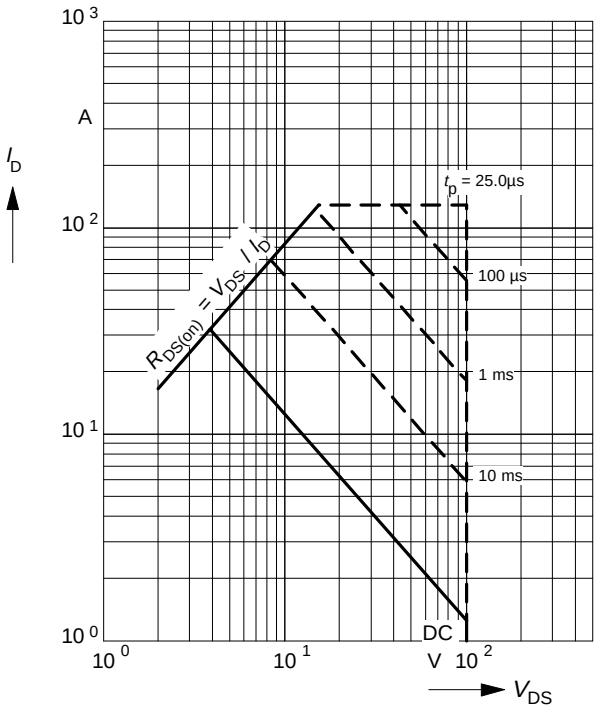

Transient thermal impedance

$Z_{th\ JC} = f(t_p)$

parameter: $D = t_p / T$

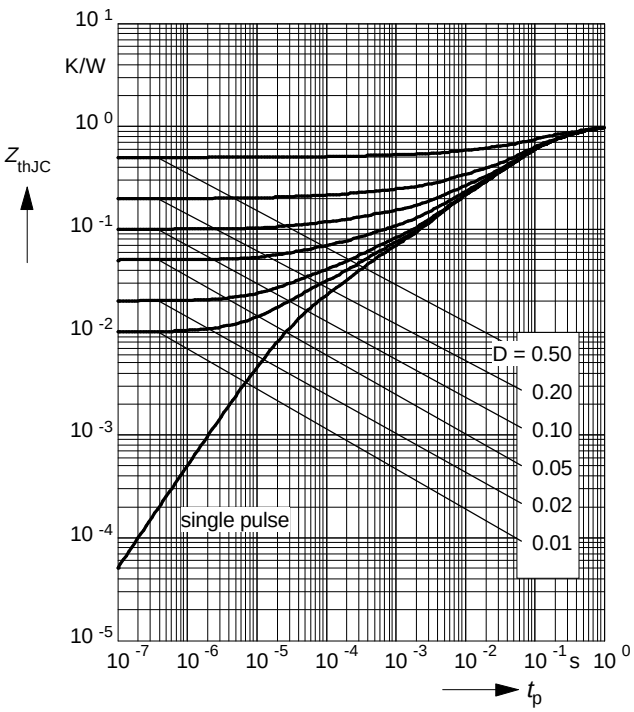

Typ. output characteristics
$I_D = f(V_{DS})$
parameter: t_p = 80 µs

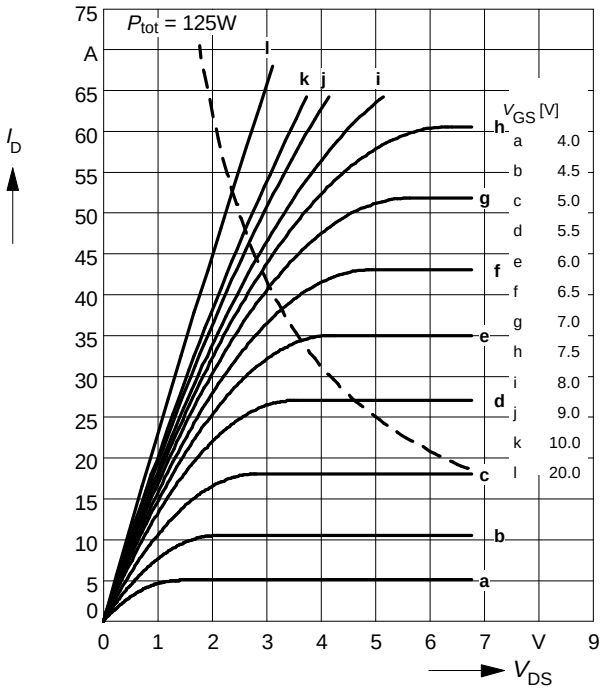

Typ. drain-source on-resistance
$R_{DS\,(on)} = f(I_D)$
parameter: V_{GS}

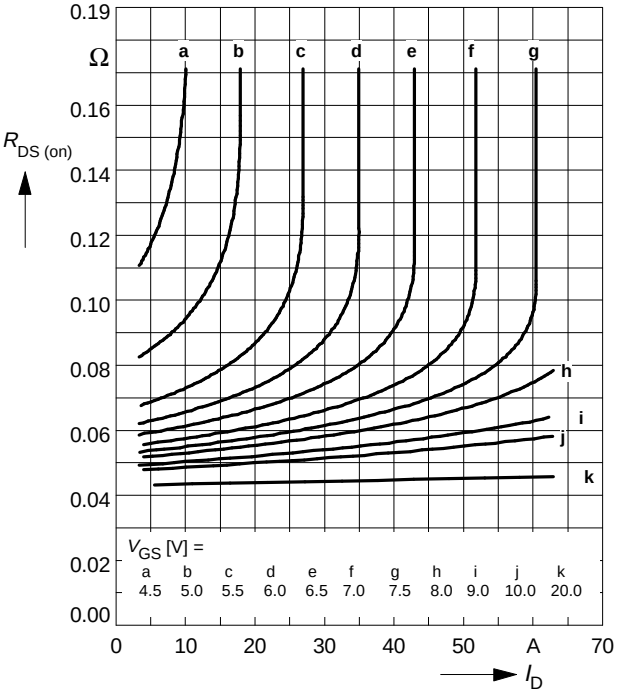

Typ. transfer characteristics $I_D = f(V_{GS})$
parameter: t_p = 80 µs
$V_{DS} \geq 2 \times I_D \times R_{DS(on)max}$

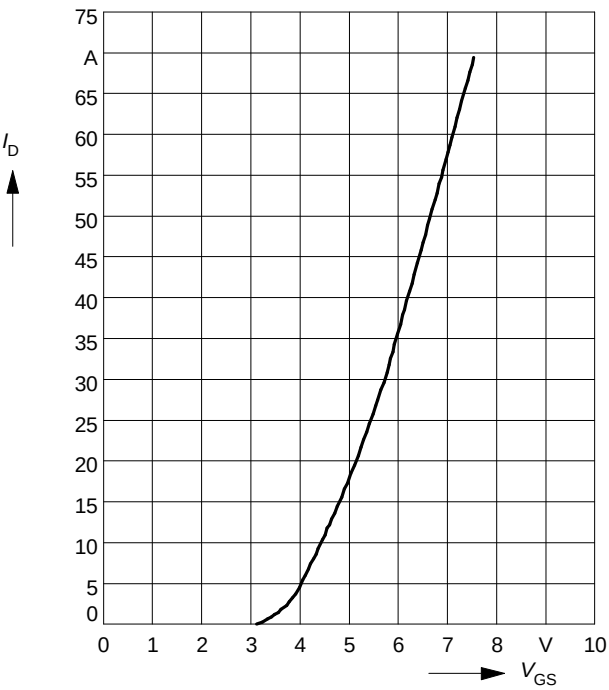

Typ. forward transconductance $g_{fs} = f(I_D)$
parameter: t_p = 80 µs,
$V_{DS} \geq 2 \times I_D \times R_{DS(on)max}$

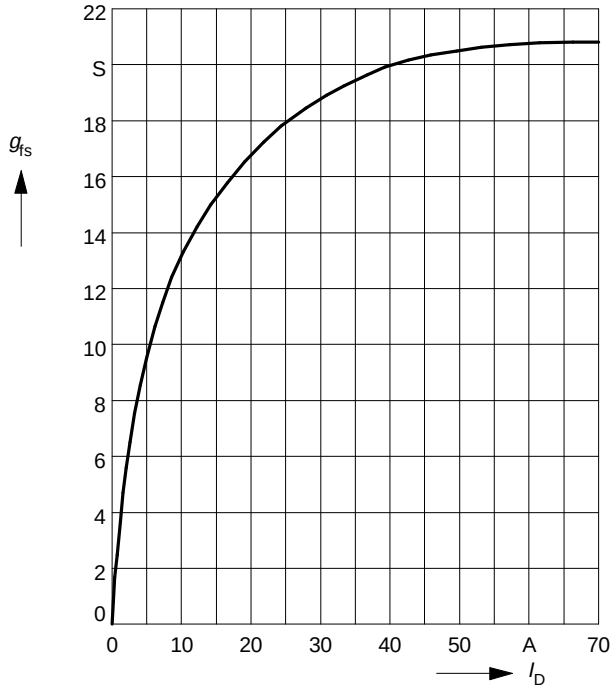

Drain-source on-resistance

$R_{DS\,(on)} = f(T_j)$

parameter: I_D = 21 A, V_{GS} = 10 V

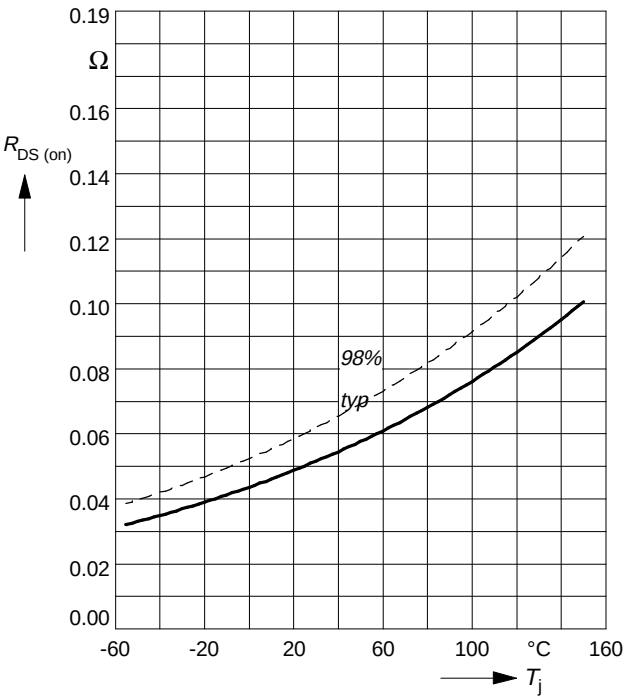

Gate threshold voltage

$V_{GS\,(th)} = f(T_j)$

parameter: $V_{GS} = V_{DS}$, I_D = 1 mA

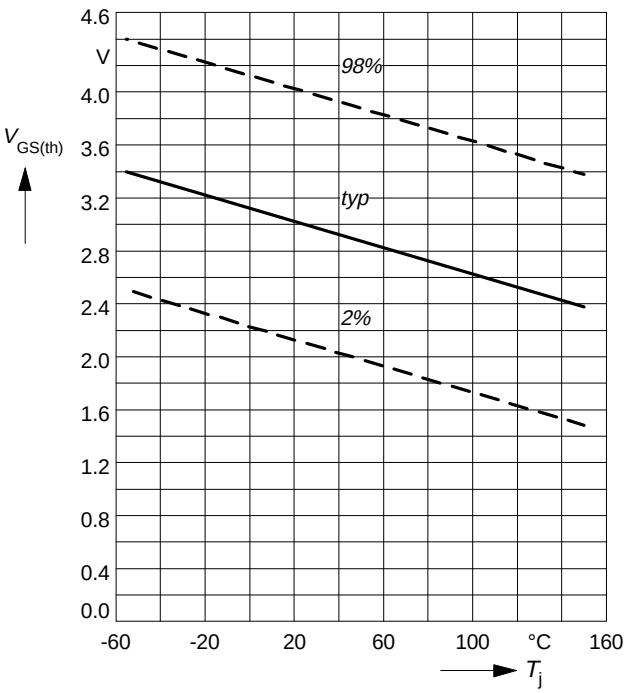

Typ. capacitances

$C = f(V_{DS})$

parameter: V_{GS} = 0V, f = 1MHz

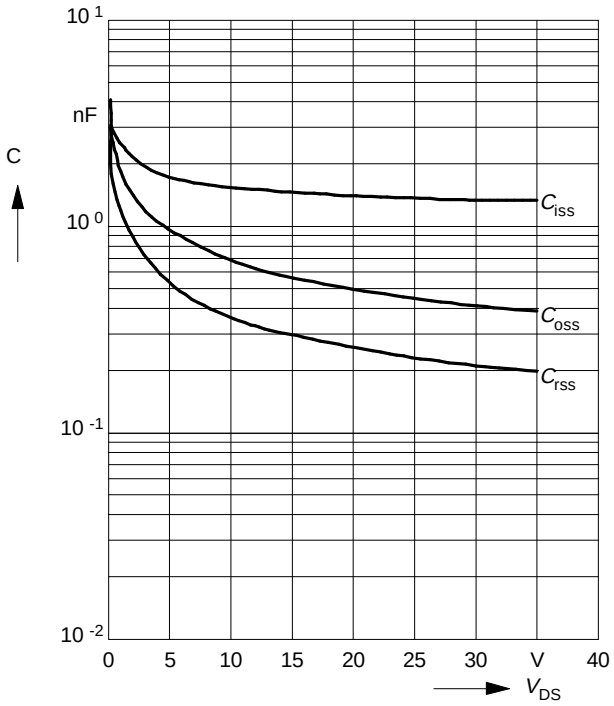

Forward characteristics of reverse diode

$I_F = f(V_{SD})$

parameter: T_j, t_p = 80 µs

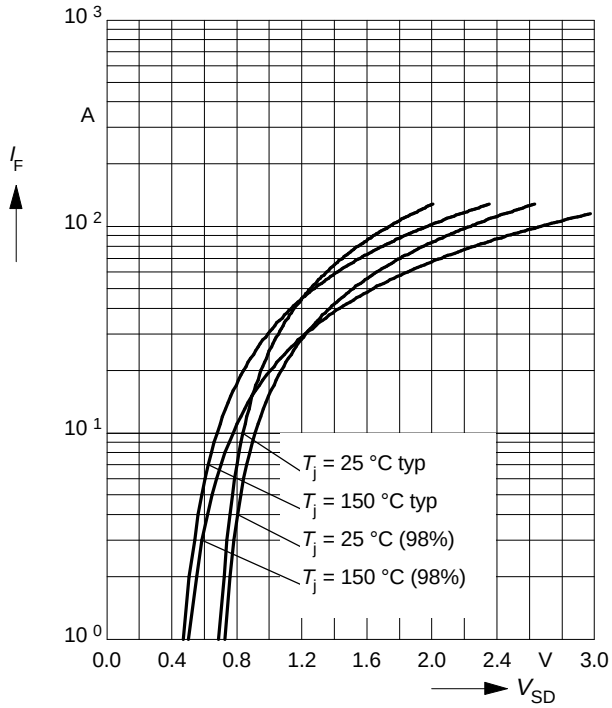

Avalanche energy $E_{AS} = f(T_j)$
parameter: I_D = 32 A, V_{DD} = 25 V
R_{GS} = 25 Ω, L = 322 µH

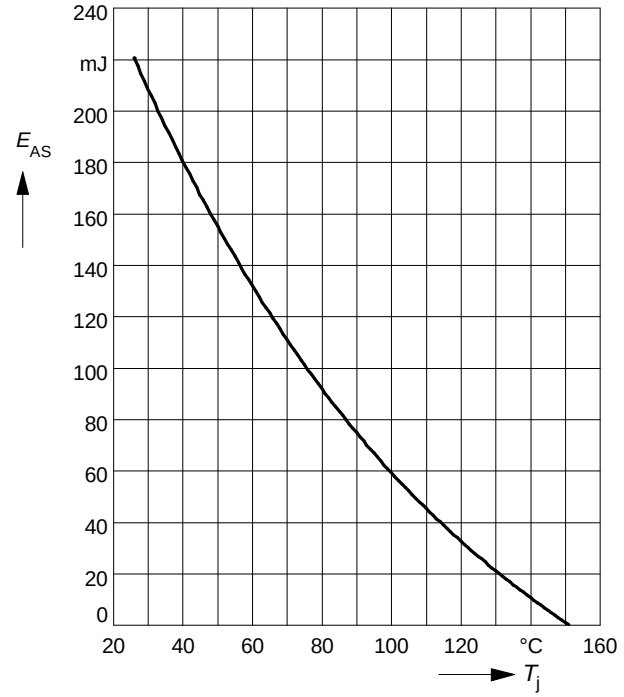

Typ. gate charge
$V_{GS} = f(Q_{Gate})$
parameter: $I_{D\ puls}$ = 51 A

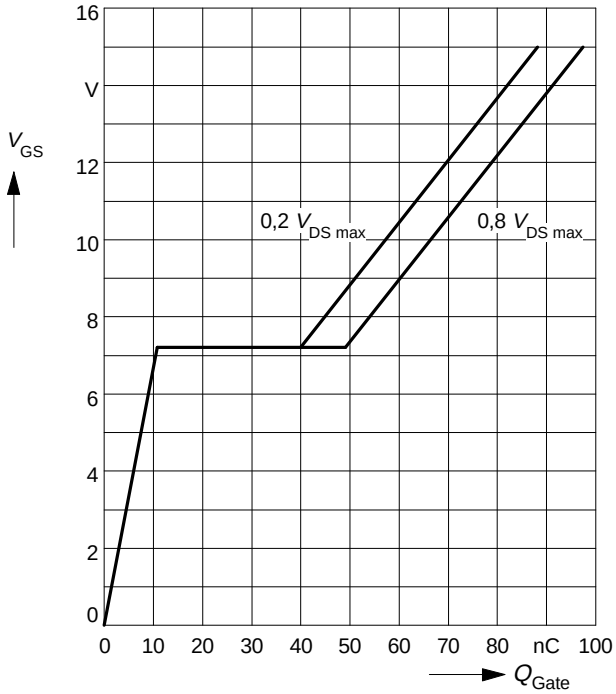

Drain-source breakdown voltage
$V_{(BR)DSS} = f(T_j)$

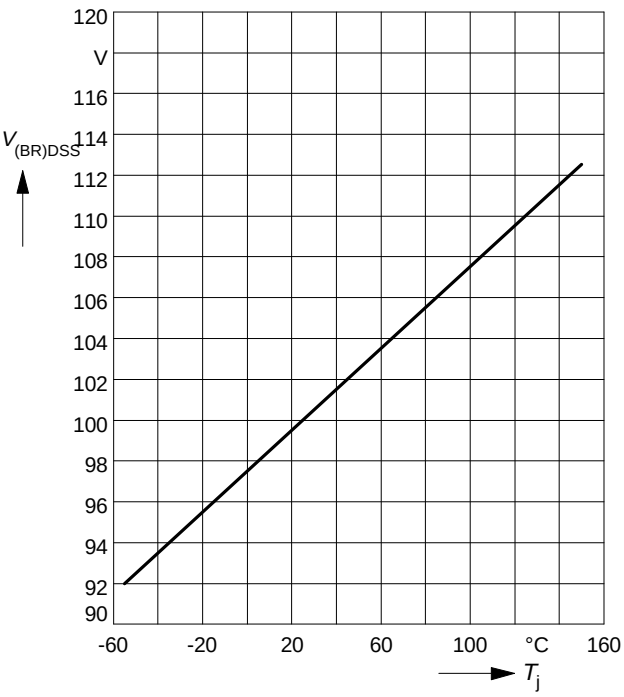

Package Outlines

TO-218 AA

Dimension in mm

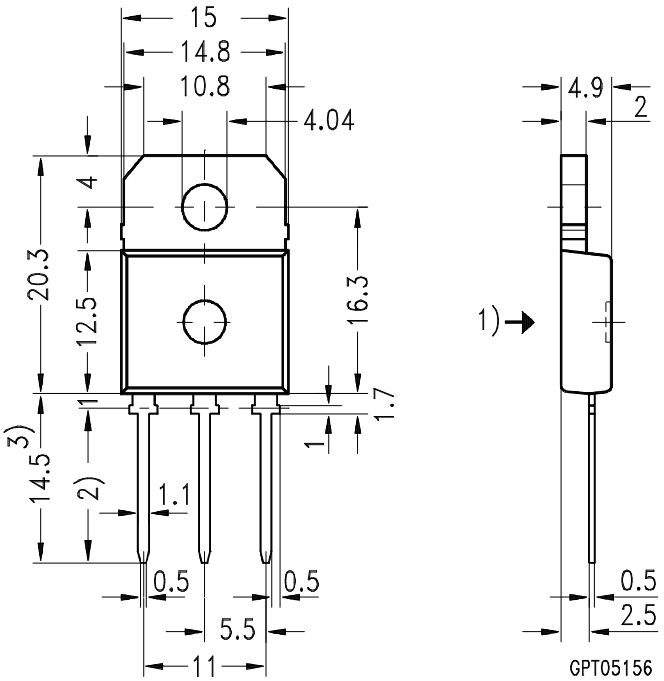

1) punch direction, burr max. 0.04
2) dip tinning
3) max. 15.5 by dip tinning press burr max. 0.05

Littlediode supplies new, hard to find or obsolete electronic components and semiconductors all over the world.

With over two million different components listed you are sure to find the part you need.

Feel free to visit us today at our online store:

LittleDiode.com

Looking forward to providing you with the best possible service.